Preparation for IPv6 in Satellite Communications

IABG Final Presentation

Version 1.0, 20.09.2004

www.iabg.de

Wolfgang Fritsche
Karl Mayer

Noordwijk, 20.09.2004

Introduction – IABG at a glance

- **IABG is a leading technical services company on the European market**
- **Founded in 1961**
- **10 locations spread over Germany**
- **Headquarter in Ottobrunn near Munich**
- **About 1000 employees mainly working in different fields of engineering**
- **For more information see www.iabg.de**

Introduction – IABG's business areas

Automotive

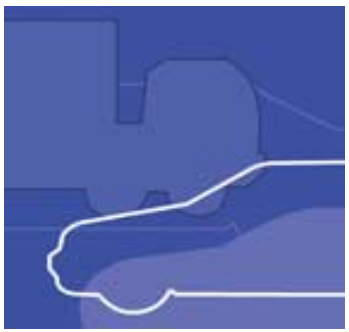

Information & Communications

Transport & Environment

Aeronautics

Space

Defence

Introduction – IABG's advanced IP services

Main focus of our work on advanced IP services

- **IPv6**
  - IPv6 transition
  - Interoperability aspects
- **IP Security**
  - Security protocols (IPsec, SSL, TLS, …)
  - Security in WLAN, Hot Spots
- **IP Mobility**
  - Mobile end systems (MIP, HMIP,…)
  - Mobile networks
  - ad-hoc-networks (OLSR, AODV, …)
- **IP over Satellite**
  - IP over DVB, SCPC
  - Secure transmission via IPsec
  - TCP performance optimization
- **IP Multicast**
  - Multicast routing protocols
  - Secure multicast
  - Reliable multicast

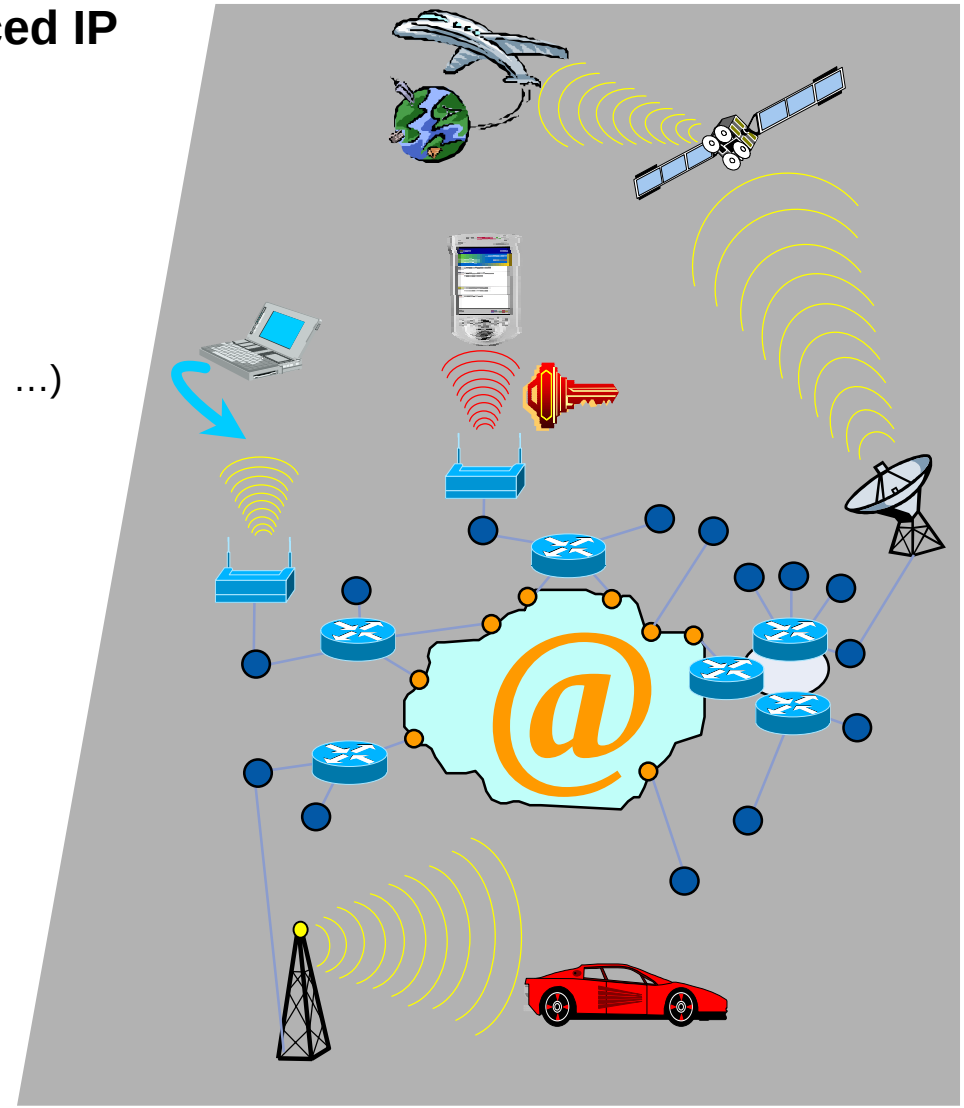

Introduction – IABG's Teleport

- **Local Internet Reseller (LIR) with IPv4 and IPv6 address range**
- **Peering with terrestrial IPv6 ISPs**
- **Provision of IPv6 over satellite service to Teleport customers**

Introduction – Key personnel in project

- Wolfgang Fritsche (project manager)
- Karl Mayer
- Gerhard Gessler
- … and Prof. Peter Kirstein (UCL)

Introduction – Introducing IPv6 in satellite networks

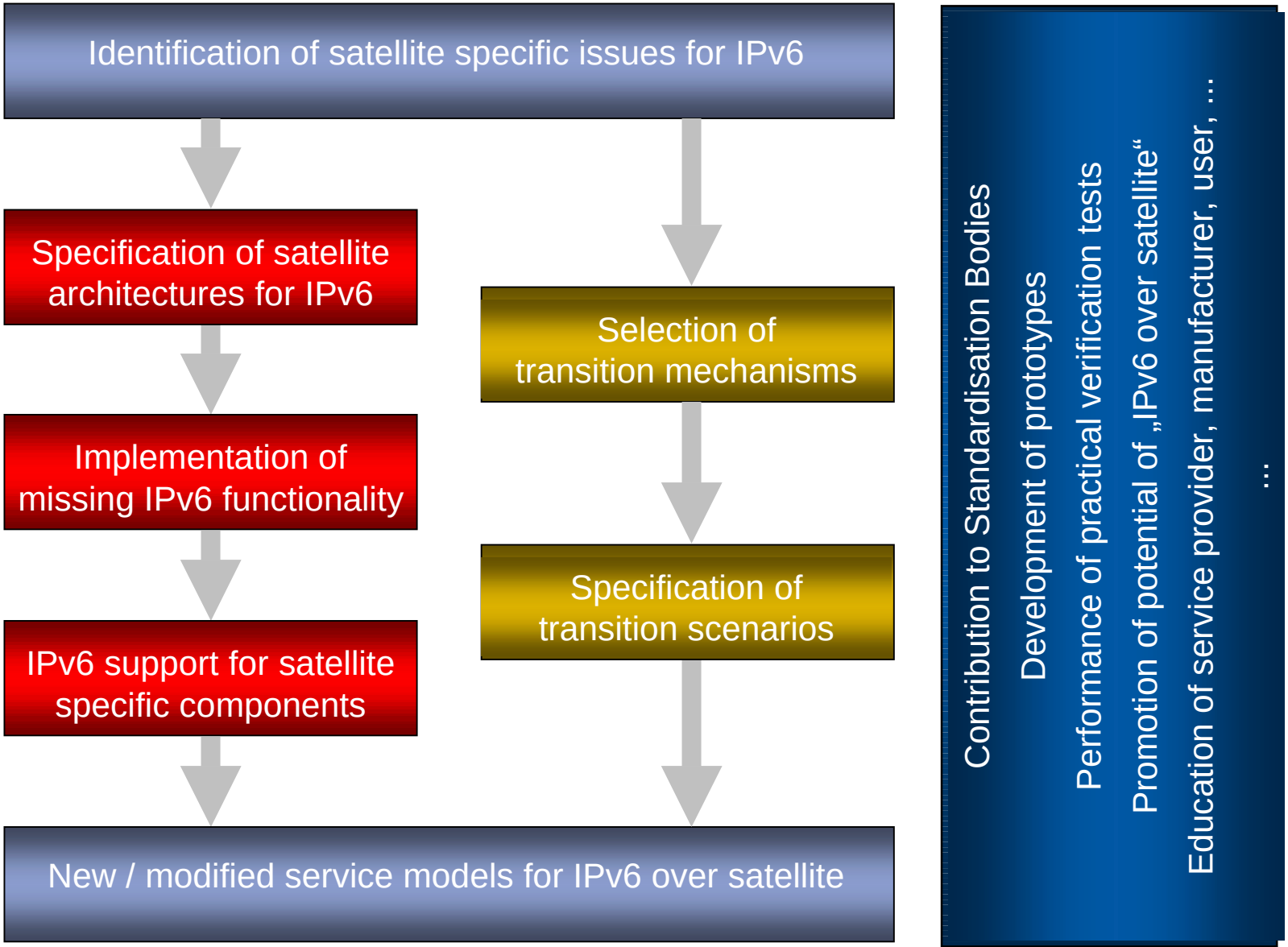

Introduction – Task overview

T1
Identification of satellite specific protocol issues for IPv6

T1.1: Identification of link layer protocol issues for IPv6
T1.2: Identification of network layer protocol issues for IPv6
T1.3: Identification of transport layer protocol issues for IPv6
T1.4: Identification of network management protocol issues for IPv6

T2
Impact of IPv6 on existing and future satellite network architectures and services

T2.1: Impact of IPv6 on satellite network architectures
T2.2: Investigation of transition scenarios for satellite networks
T2.3: Investigation of modified service offerings using IPv6
T2.4: Detailed transition plan for example satellite network architectures

T3
Definition and Preparation of IPv6 demonstrations over satellite

T3.1: Identification of illustrating IPv6 functionality and applications
T3.2: Description of possible demonstration scenarios
T3.3: Selection and specification of the pilot

T4
Pilot demonstration of IPv6 over satellite

T4.1: Integration of pilot
T4.2: Execution of demonstration

T5
Identification of IPv6 roadmap and recommendation

T6
Dissemination of project activities and results

T7
Project and Quality Management

Agenda

- Introduction
- IPv6 general aspects
- Satellite specific protocol issues
- Modified service offerings
- Transition scenarios
- Demonstrations
- Dissemination
- Lessons learnt and recommendations
- Questions and discussion

IPv6 general aspects – New features

- **IPv6 header with 128 bit addresses**
- **Extension headers (RH, DH, AH, ESP, …)**
- **Mandatory IPsec (in implementations with full IPv6 support)**
- **IPv6 Neighbour Discovery (built-in mechanism)**
  - Address Resolution
  - Duplicate Address Detection
  - Neighbour Unreachability Detection
  - Router and Prefix Discovery
- **IPv6 stateless address autoconfiguration**

IPv6 general aspects – IPv6 stateless address autoconfiguration

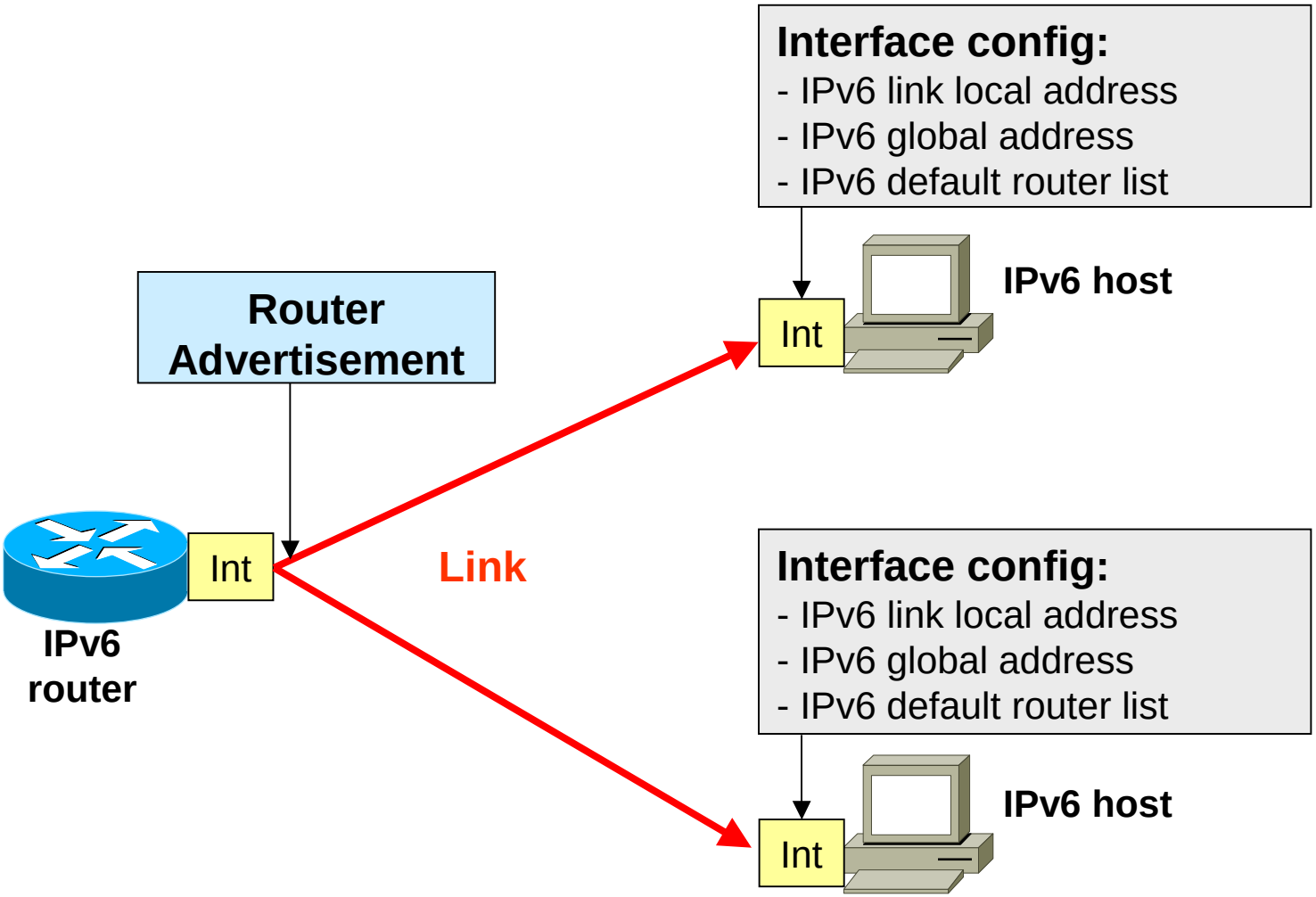

IPv6 general aspects – Bidirectional links and link multicast

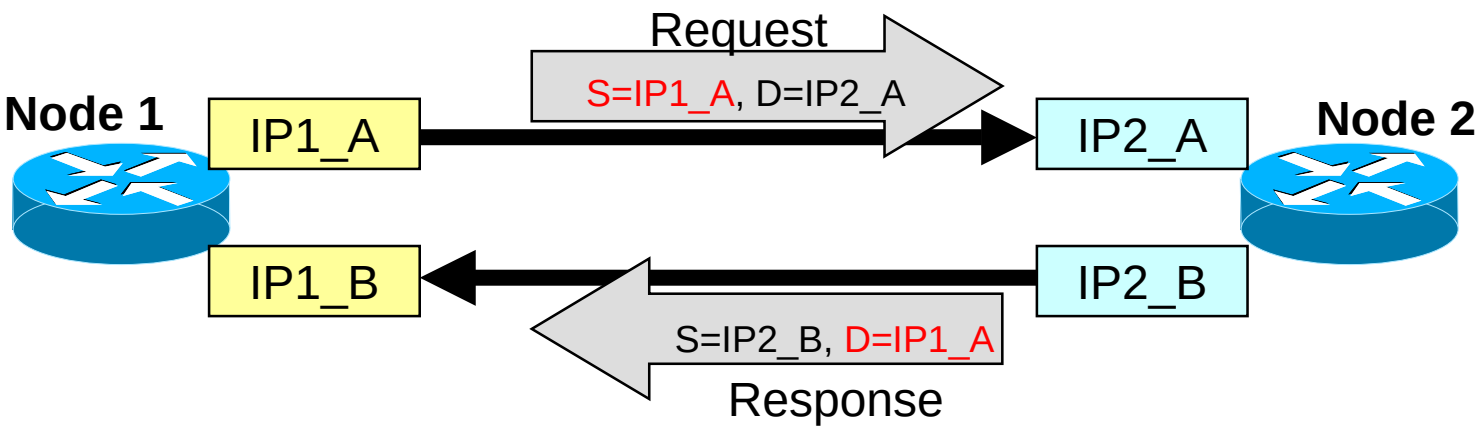

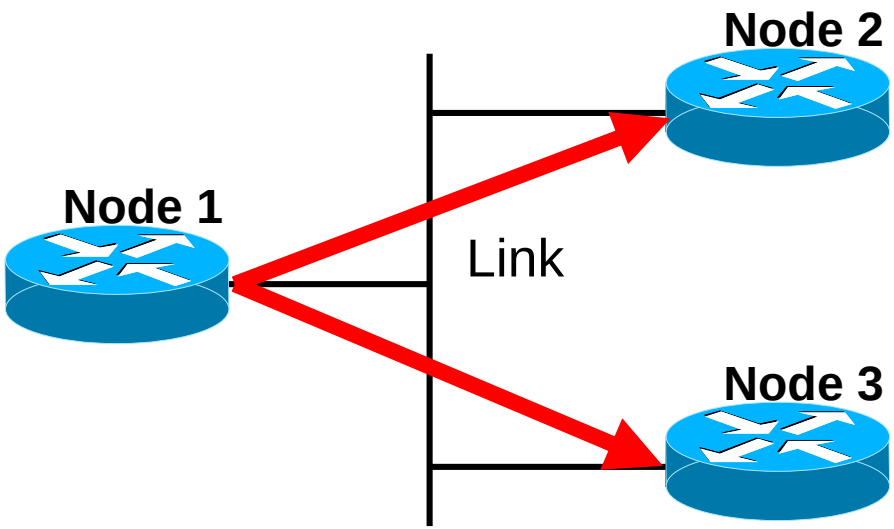

- IPv6 Neighbour Discovery
  - AR, DAD, NUD
  - Router and Prefix Discovery
- IPv6 stateless address autoconfiguration

IPv6 general aspects – Logical interface

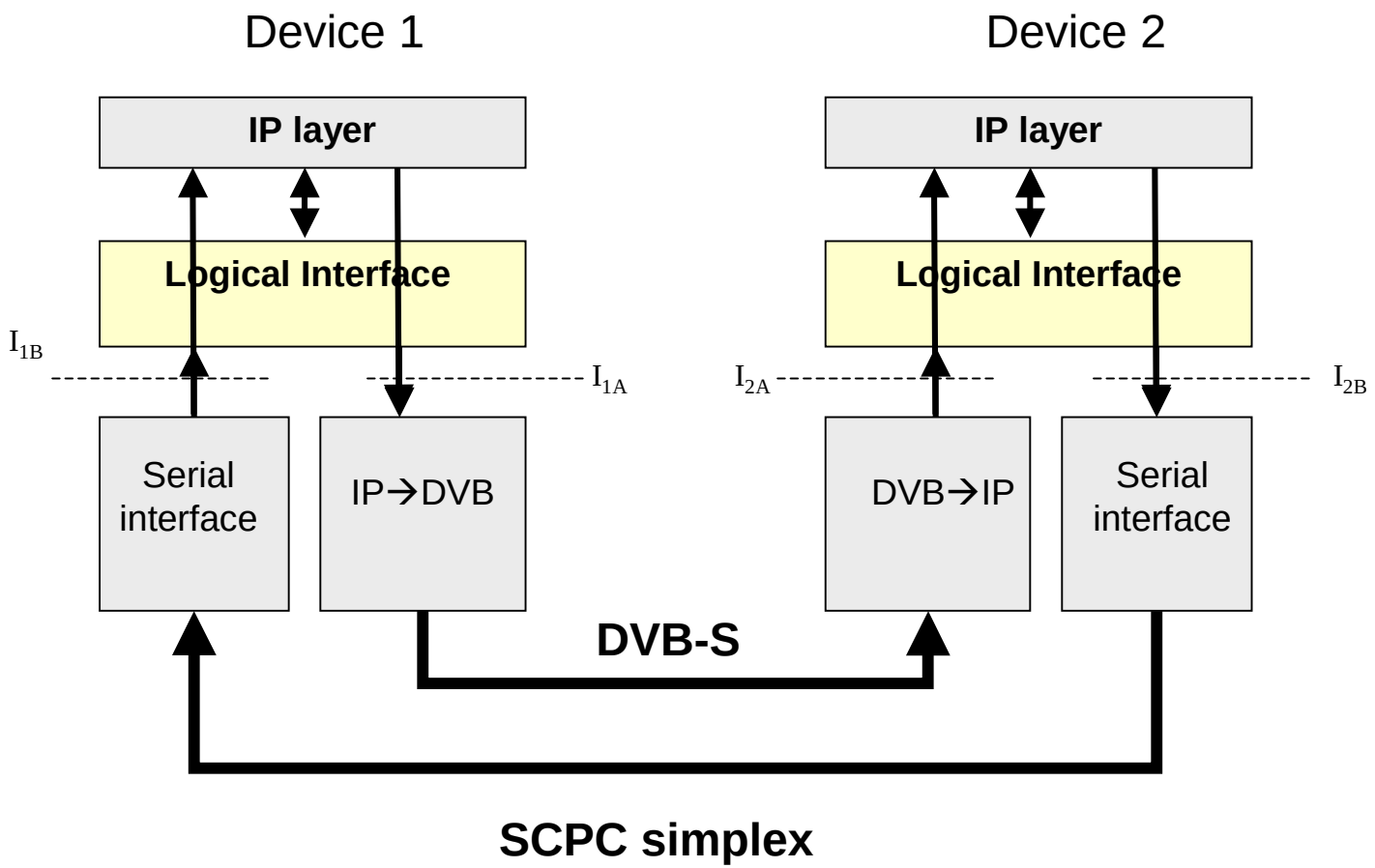

IPv6 general aspects – UDLR mechanism

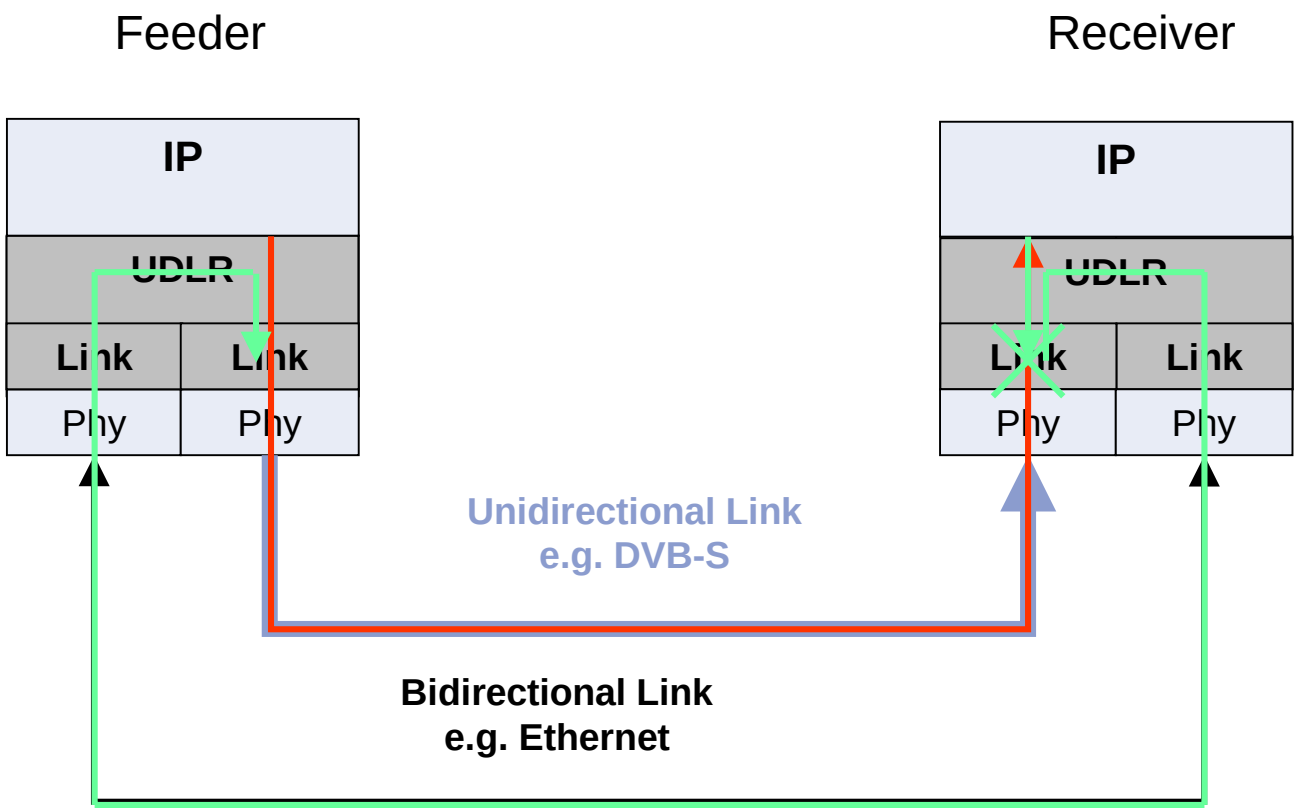

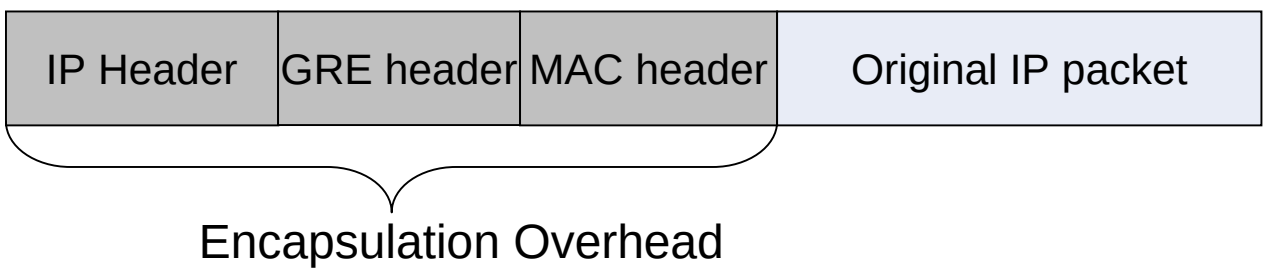

Agenda

- Introduction
- IPv6 general aspects
- Satellite specific protocol issues
- Modified service offerings
- Transition scenarios
- Demonstrations
- Dissemination
- Lessons learnt
- Questions and discussion

Satellite specific protocol issues – Link layer protocols

DVB-S link:

DVB-S protocol stack:

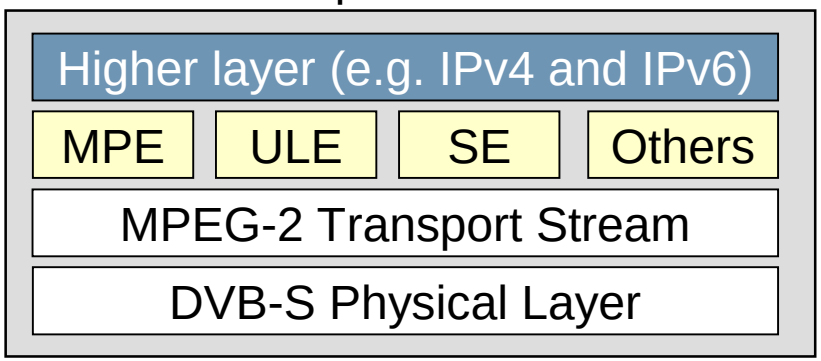

MPE

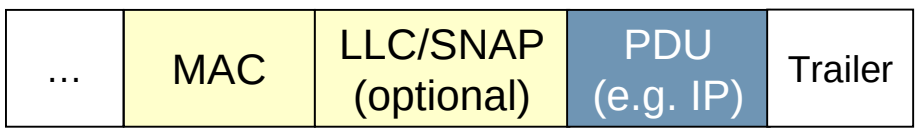

ULE

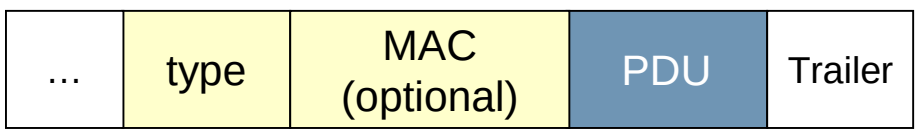

- **MPE:**
  - **IP version signalling?**
  - **Address resolution?**
- **ULE:**
  - **Address resolution?**

Satellite specific protocol issues – Link layer protocols

- **DVB-RCS link:**
  - IP version signalling in MPE?
  - Address resolution?
  - Unidirectional link or bidirectional link?
  - Connection Control Protocol?

- **SCPC link:**
  - Serial line protocols over SCPC
  - HDLC, Frame Relay, and PPP support IPv6

Satellite specific protocol issues – Network layer protocols

- **Header compression (HC)**
  - Problems with HC as specified in RFC 1144 (does only support IP/TCP traffic)
  - IPv6 support in HC as specified in RFC 2507 and ROHC (RFC 3095)
- **IP Multicast**
  - PIM-DM and PIM-SM (revised version) support IPv6
  - SSM, DVMRP, MOSPF, BGP-4+, and BGMP support IPv6
  - Proprietary multicast relay solutions for networks without multicast support often do not support IPv6 (e.g. OmniCast)
- **IPv6 Multihoming**
  - Large global IPv6 address space
  - Mobile IPv6 and HIP (Host Identity Protocol) support IP address change during ongoing sessions
  - IPv6 Multihoming can be done more efficient

Satellite specific protocol issues – Network layer protocols

- **Host mobility (MIPv4 and MIPv6)**
  - Bidirectional link between CN, HA, and MN required
  - Route optimization (RO) is built-in in MIPv6
  - Return Routability process (security check while RO) is delayed in case of satellite links → handoff time increases

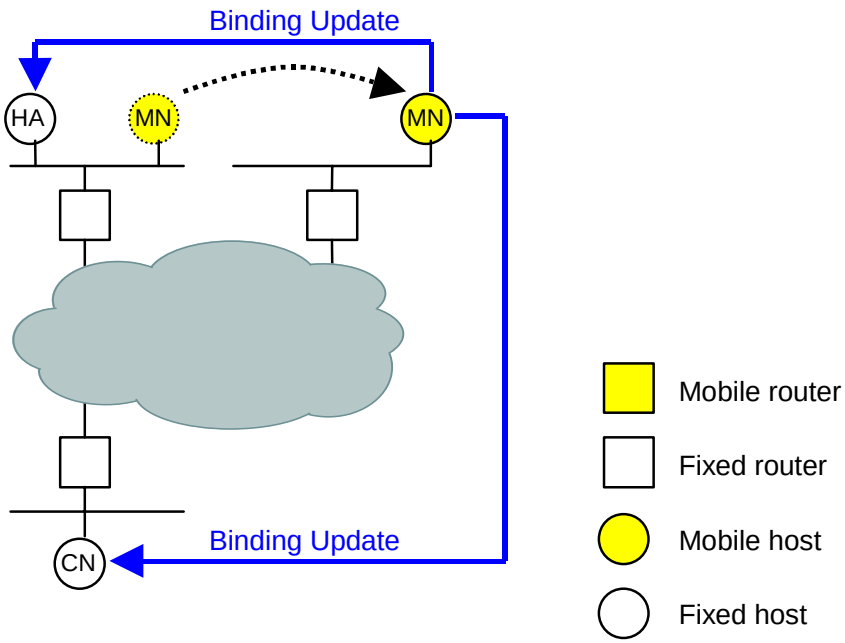

- **Network mobility (NEMO)**
  - No route optimization

- **Mobile Ad Hoc Networks (MANETs)**
  - Topology of network is changing
  - MANET routing protocols support IPv6

Satellite specific protocol issues – Transport layer

- **Enhanced TCP**
  - Enhanced TCP protocols like TCP Tahoe, TCP Reno, TCP Vegas, TCP New Reno and TCP Santa Cruz operate above IPv4 and IPv6
- **PEP**
  - Protocol Enhancing Proxies (PEPs) are standardized in IETF for both, IPv4 and IPv6
  - Some PEPs (TCP splitting) break end-2-end transparency:
    - IPv6 assumes end-2-end transparency
    - IPsec support mandatory in IPv6
    - Hence, IPv6 could be affected more severe
  - PEP devices available mostly do not support IPv6, and hence, TCP over IPv6 traffic mostly cannot be enhanced

Satellite specific protocol issues – PEP without IPv6 support

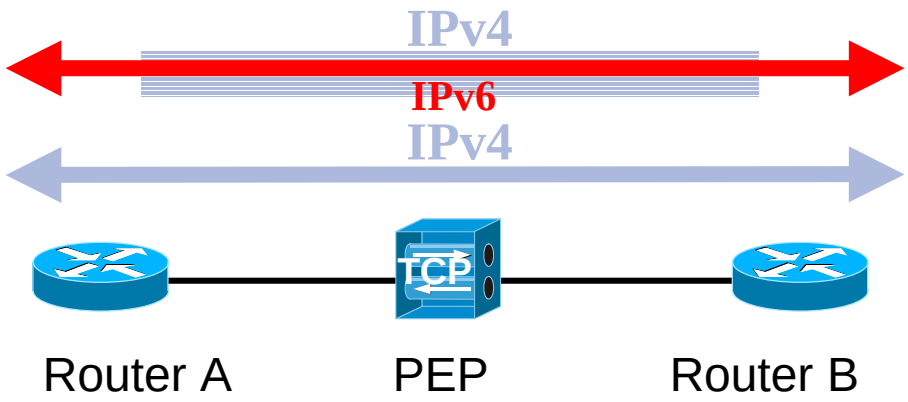

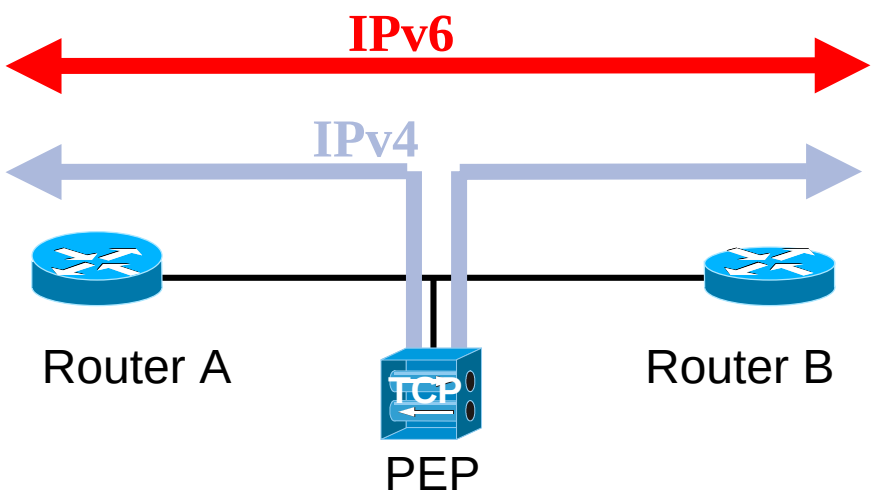

Satellite specific protocol issues – Network management

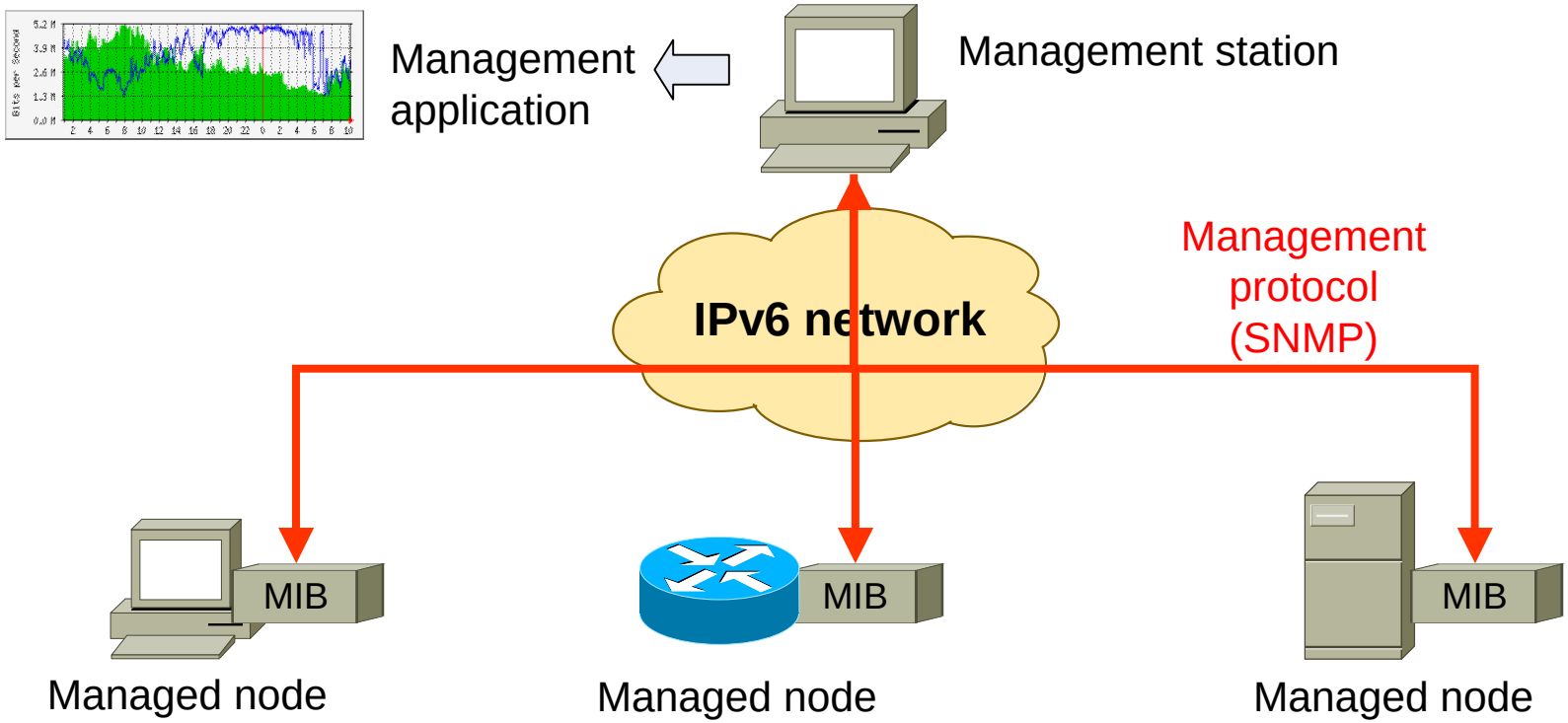

IPv6 support required in:

- SNMP protocol → SNMPv2, SNMPv3
- Agents, managers, applications → e.g. Net-SNMP package
- Management Information Bases (MIBs) → other objects

Satellite specific protocol issues – Network management

- **SNMP support:**
  - DVB-S: Network management is not specified
  - DVB-RCS:
    - SNMP Network Management is optional
    - missing: IPV6-MIB, IPV6-ICMP-MIB
- **IPv6 support in MIBs:**
  - DVB-RCS-MIB: Several objects of type IpAddress (32 bit)
  - Proprietary MIBs use IpAddress type: e.g. Harmonic and SkyStream
- **IPv6 support in management applications:**
  - Input/output fields often support only IPv4
  - Parsers often support IPv4 address format only

Satellite specific protocol issues – AAA

- **Several Authentication, Authorization and Accounting (AAA) protocols have IPv6 support e.g.**
  - COPS (Common Open Policy Service)
  - Diameter
  - Remote Access Dial In User Service (RADIUS)

- **Bidirectional link requirement:**
  - COPS: TCP
  - RADIUS: UDP
  - Diameter: TCP
  - Exception: Diameter could be based on SCTP (Session Control Transport Protocol), and SCTP INIT message includes peering IP address of the sender

Agenda

- Introduction
- IPv6 general aspects
- Satellite specific protocol issues
- **Modified service offerings**
- Transition scenarios
- Demonstrations
- Dissemination
- Lessons learnt
- Questions and discussion

Modified service offerings – End-to-end IP addressing

- **Issue in IPv4:**
  - Not enough global unique IPv4 addresses available
  - Deployment of NAT boxes (Network Address Translation)
  - Deployment of Application Level Gateways (ALGs)
- **Problem with NAT boxes and ALGs:**
  - Break of end-to-end connectivity (principle of the Internet)
  - NAT and ALG represent a single point of failure
  - Any application with IP address info in the payload requires an ALG
  - ALGs cannot access payload when encrypted (IPsec)
  - NAPT has no information about related sessions (VoIP)

Modified service offerings – IPsec

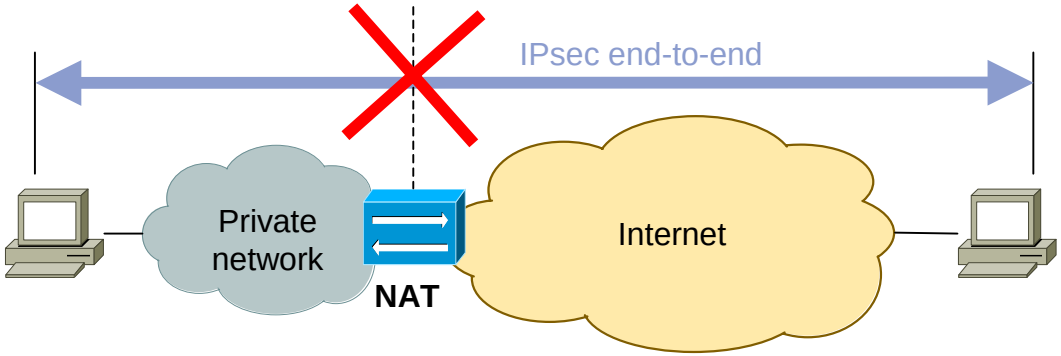

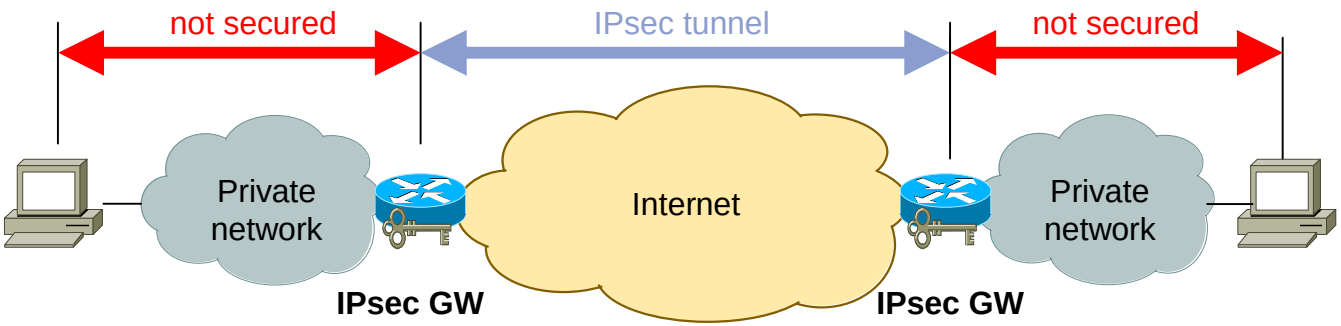

- ESP encrypts upper layers (ports, TCP checksum)
- AH protects several fields in the IP header and upper layers

Modified service offerings – Voice over IP

- **H.323 and NAT**
  - Q.931: Call setup, H.245: Control, T.120: Data, RTP: Audio and video
  - Several connections with related address information
    - H.245 address and port negotiation via Q.931
    - RTP/RTCP addresses and ports negotiated via H.245
    - H.245 connection can be encrypted → no payload change possible
  - Difficult for ALGs to manage related sessions

- **SIP and NAT**
  - IP addresses and ports at several places in SIP messages
  - Example: SIP INVITE message
    - IP addresses and ports in header and in SDP part

Modified service offerings

IP mobility

- MIPv6 has route optimization integrated
- NEMO currently only specified for IPv6 as extension to MIPv6
- NEMO allows for platform mobility support, such as aircrafts, ships, trains, vehicles

IPsec

- IPsec support mandatory in all nodes with full IPv6 implementations
- No more NAT deployment → allows large scale deployment (e.g. IPsec over satellite)

CGAs

- Cryptographically Generated Addresses (only possible with IPv6)
- Allows for node authentication without key infrastructure (e.g. satellite terminals)

IPv6 SAA

- IPv6 stateless address autoconfiguration

Agenda

- Introduction
- IPv6 general aspects
- Satellite specific protocol issues
- Modified service offerings
- Transition scenarios
- Demonstrations
- Dissemination
- Lessons learnt
- Questions and discussion

Transition scenarios

Generic IPv6

transition scenarios

Transition scenarios – IPv6 support in satellite devices

- **DVB-S links: Modules/devices do not support IPv6**
  - DVB gateways
  - DVB receivers
  - Exceptions: New emerged devices with ULE support
- **DVB-RCS links: Modules/devices do not support IPv6**
  - DVB-RCS gateway
  - RCS Terminals
- **SCPC links: Modules/devices support IPv6**
  - Serial interfaces of routers

Transition scenarios – Generic transition methods

Dual stack:

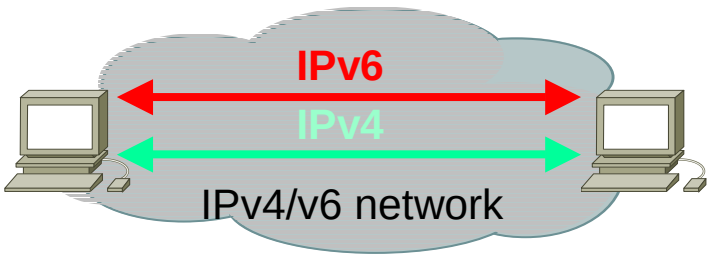

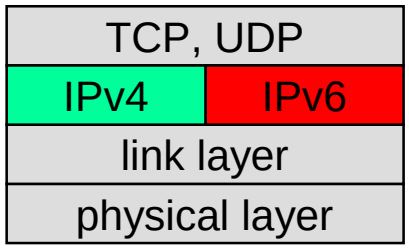

Tunneling (e.g configured, automatic, 6to4, 6over4):

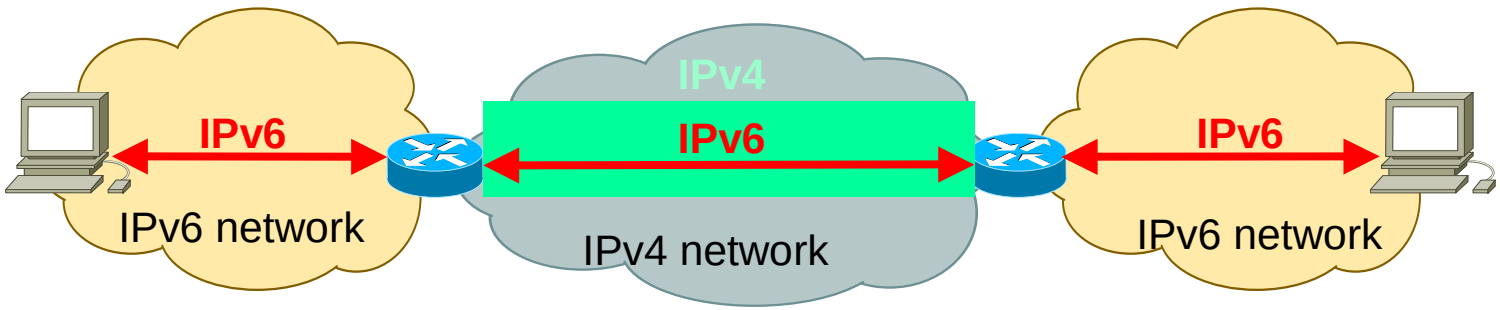

Translation (e.g. NAT-PT, proxies):

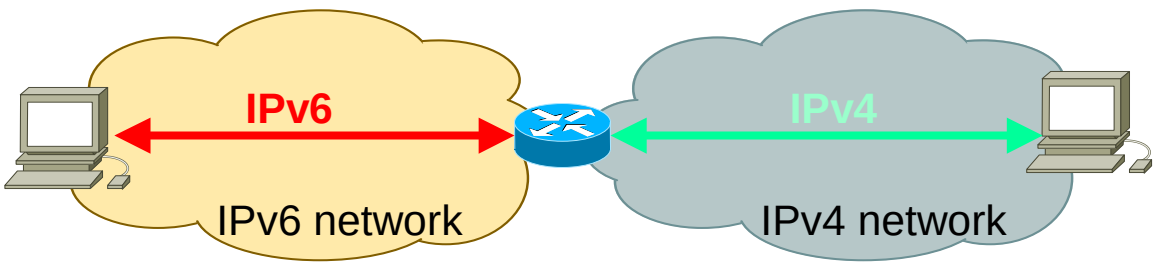

Transition scenarios

Detailed transition plan for a DVB-S/RCS architecture

Transition scenarios – DVB-S/RCS architecture with transparent satellite

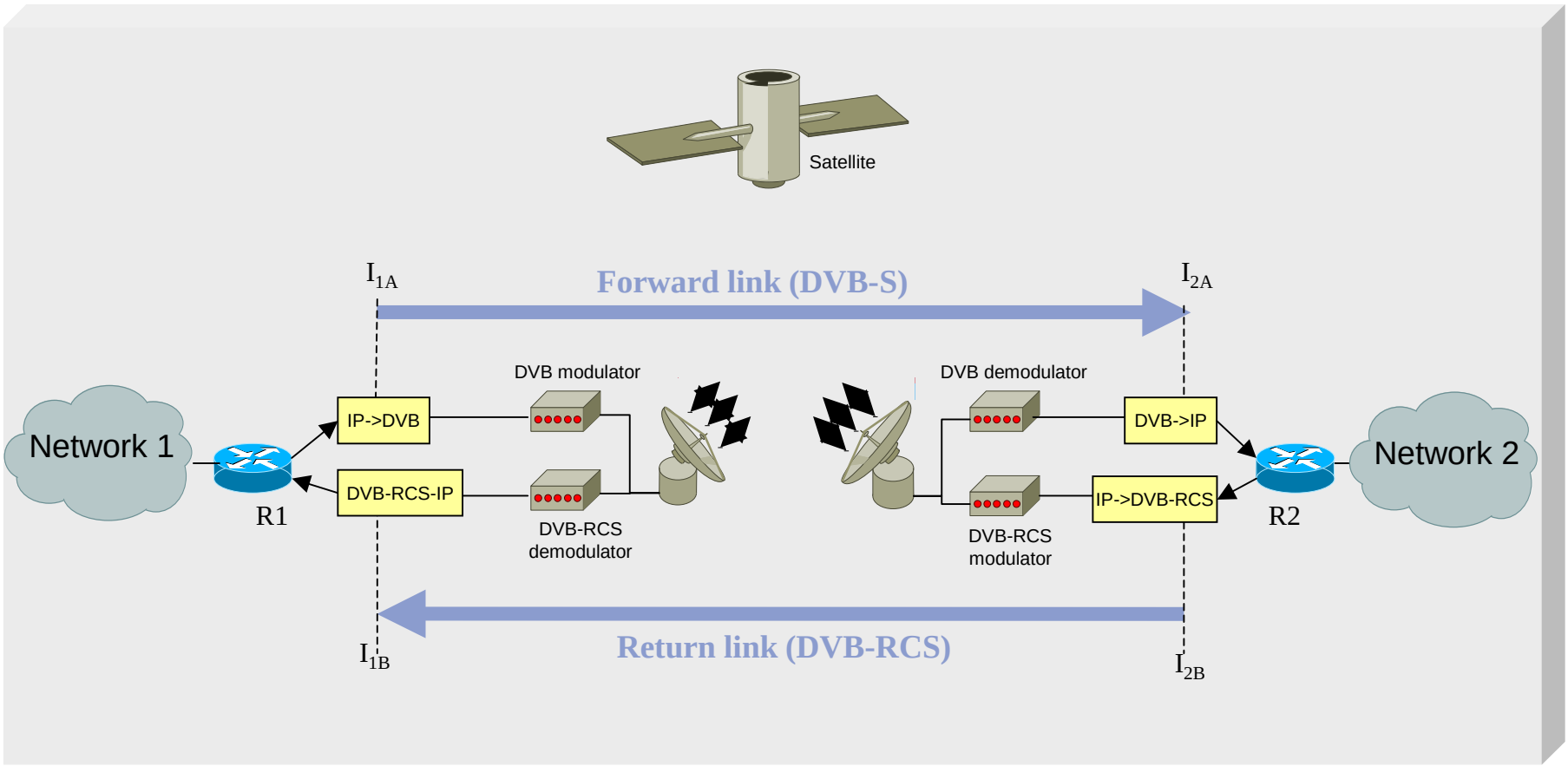

Transition scenarios – DVB-S/RCS architecture with transparent satellite

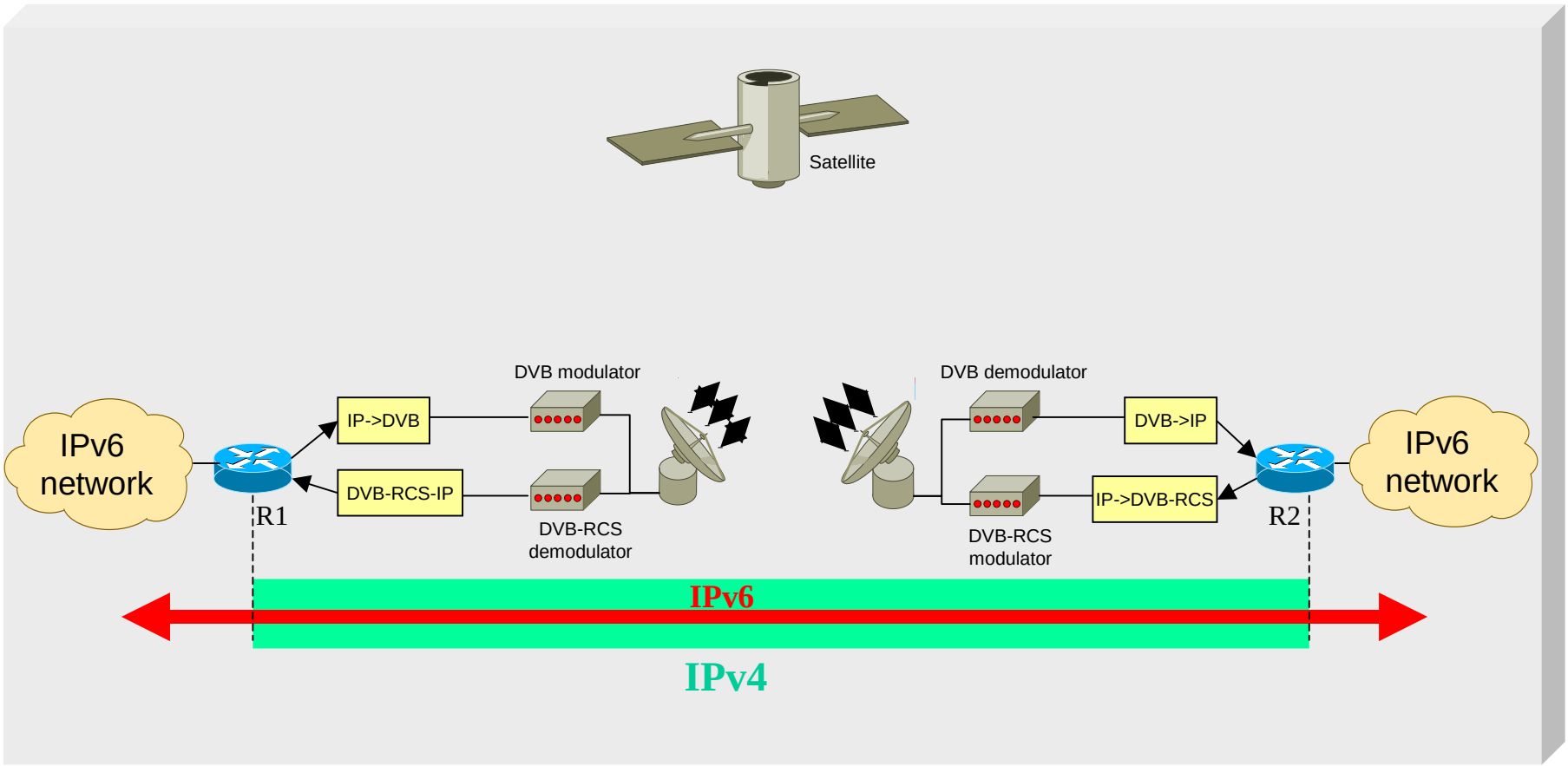

Transition scenarios – DVB-S/RCS architecture with on-board switching

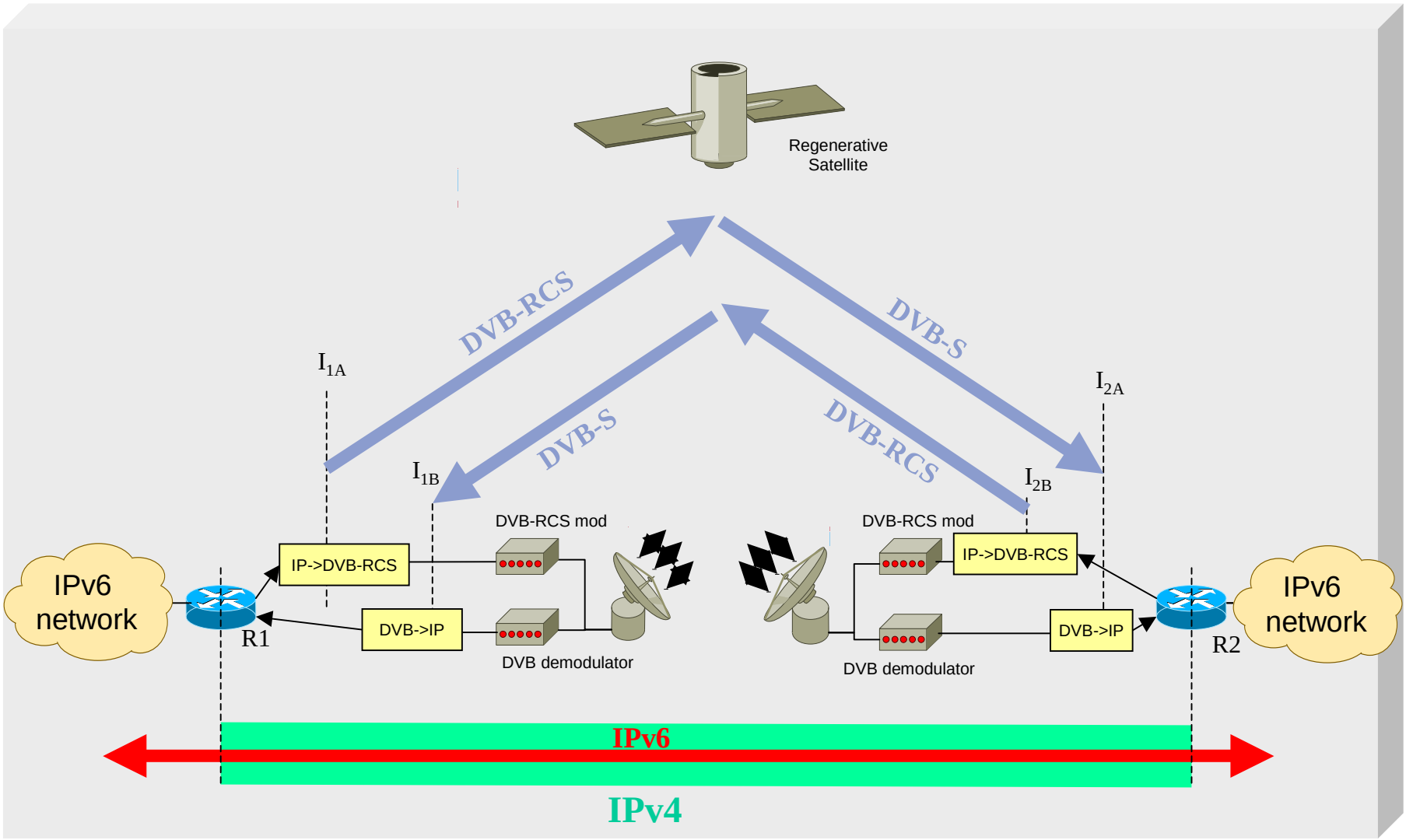

Transition scenarios – DVB-S/RCS architecture with on-board switching

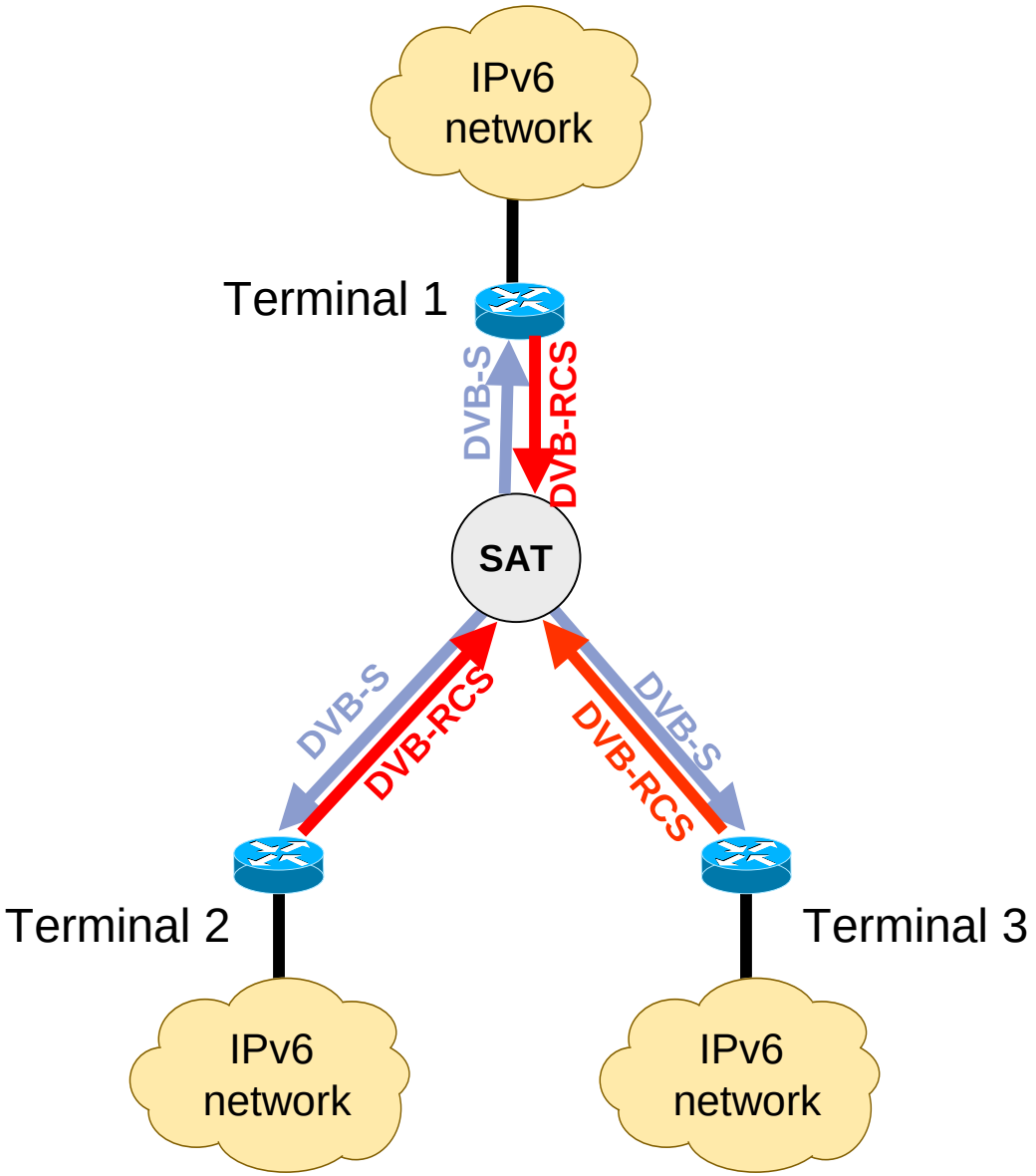

Transition scenarios – DVB-S/RCS architecture with on-board switching

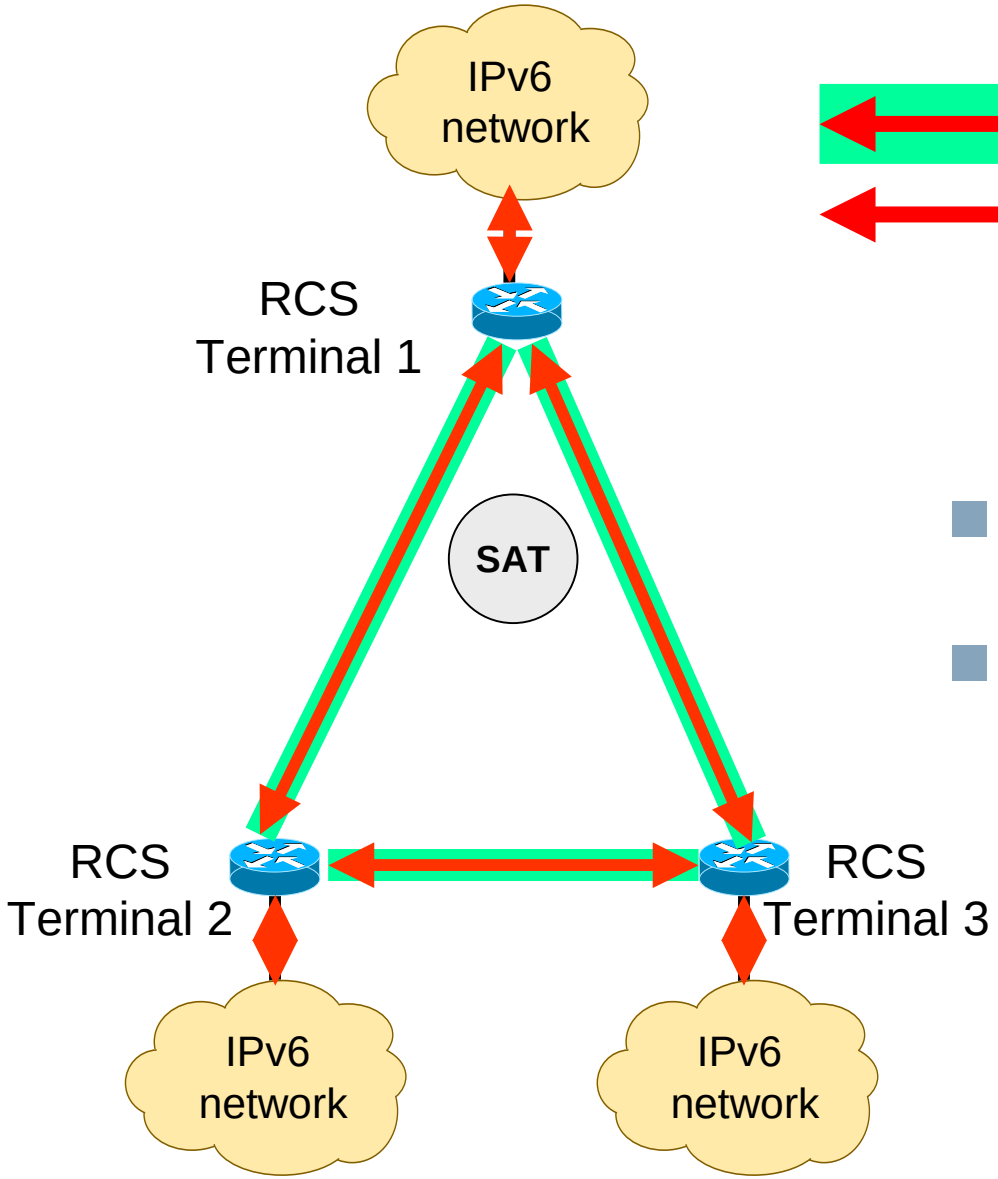

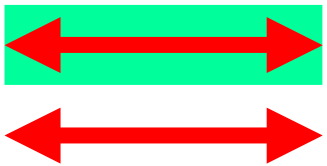

IPv6 over IPv4

native IPv6

- Separate IPv6 over IPv4 tunnel between all RCSTs
- Loss of IP multicast

Transition scenarios : DVB-S/RCS network status

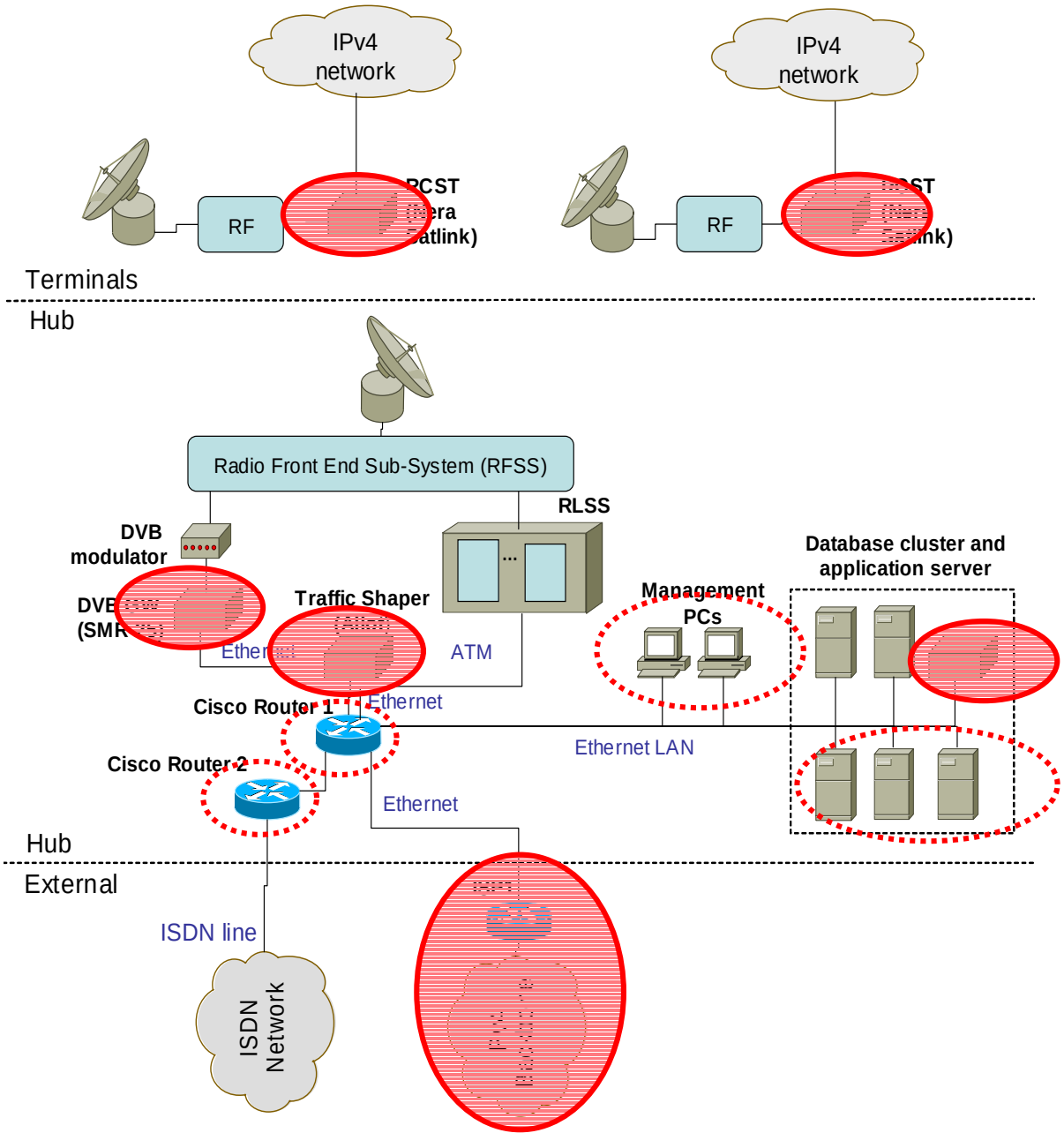

Modifications required:

- IOS of Cisco routers
- Management applications
- Applications (Oracle 10g)

Replacement required:

- ISP with IPv6 support
- Traffic shaper
- DVB GW (e.g. ODG)
- RCS Terminals
- Database disk cluster

Transition costs:

- Software upgrades
- New devices
- Training for personnel

Transition scenarios : DVB-S/RCS network with IPv6 in IPv4 tunneling

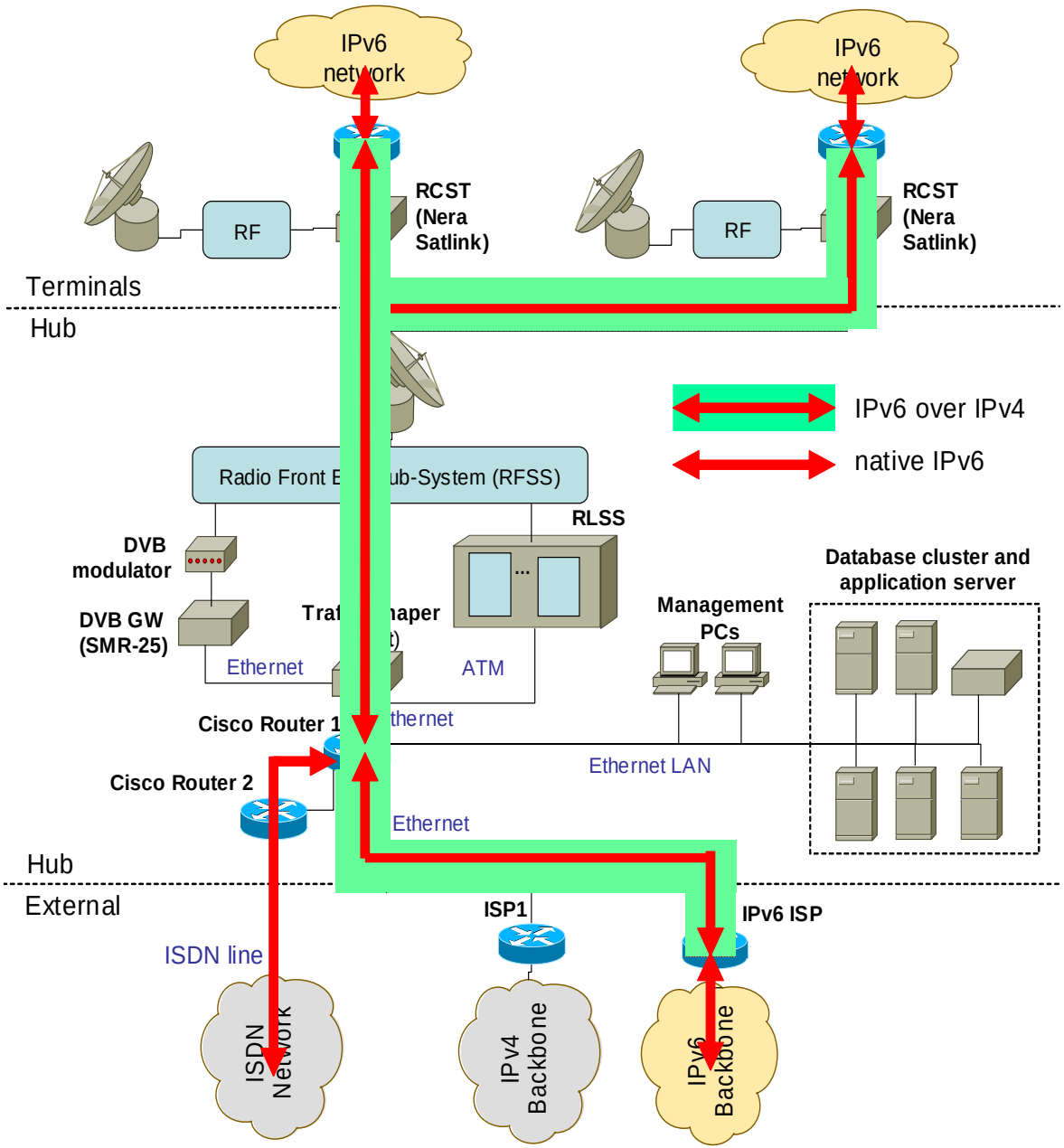

Deployment case:

- Customers have IPv6 networks (more addresses)
- Customer wants to be connected to IPv6 Internet

Transition steps:

- Tunnel to IPv6 ISP or direct connection to IPv6 ISP
- Insert IPv6-capable router at branches
- IPv6 over IPv4 tunnels between R1 and router at branches

Transition scenarios

Detailed transition plan for a DVB-S/SCPC architecture

Transition scenarios – Architectural overview

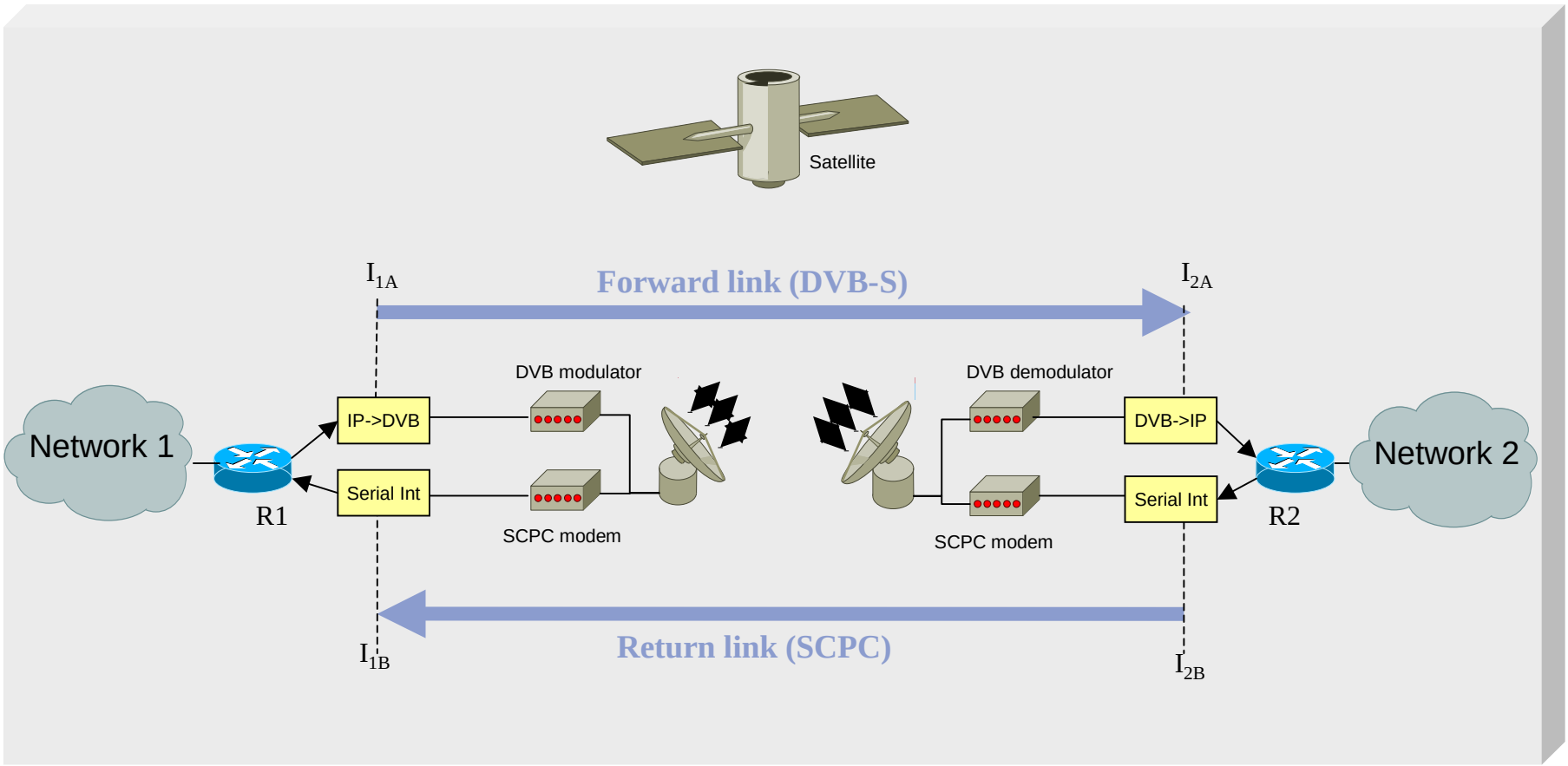

- **Unidirectional links**

Transition scenarios – Long-term solution for receiving side

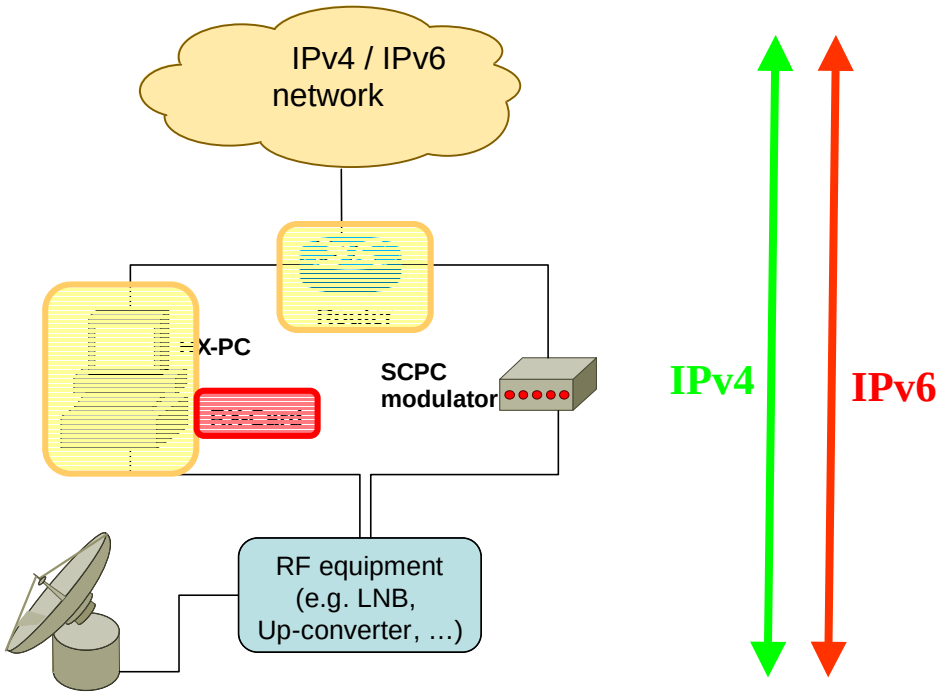

New components

Modified components

- **Upgrade router to OS with IPv6 support**
- **Replace OS on DVB-S receiver with one with IPv6 support**
- **Use IPv4 and IPv6 capable DVB-S receiving card**

Transition scenarios – Long-term solution for hub

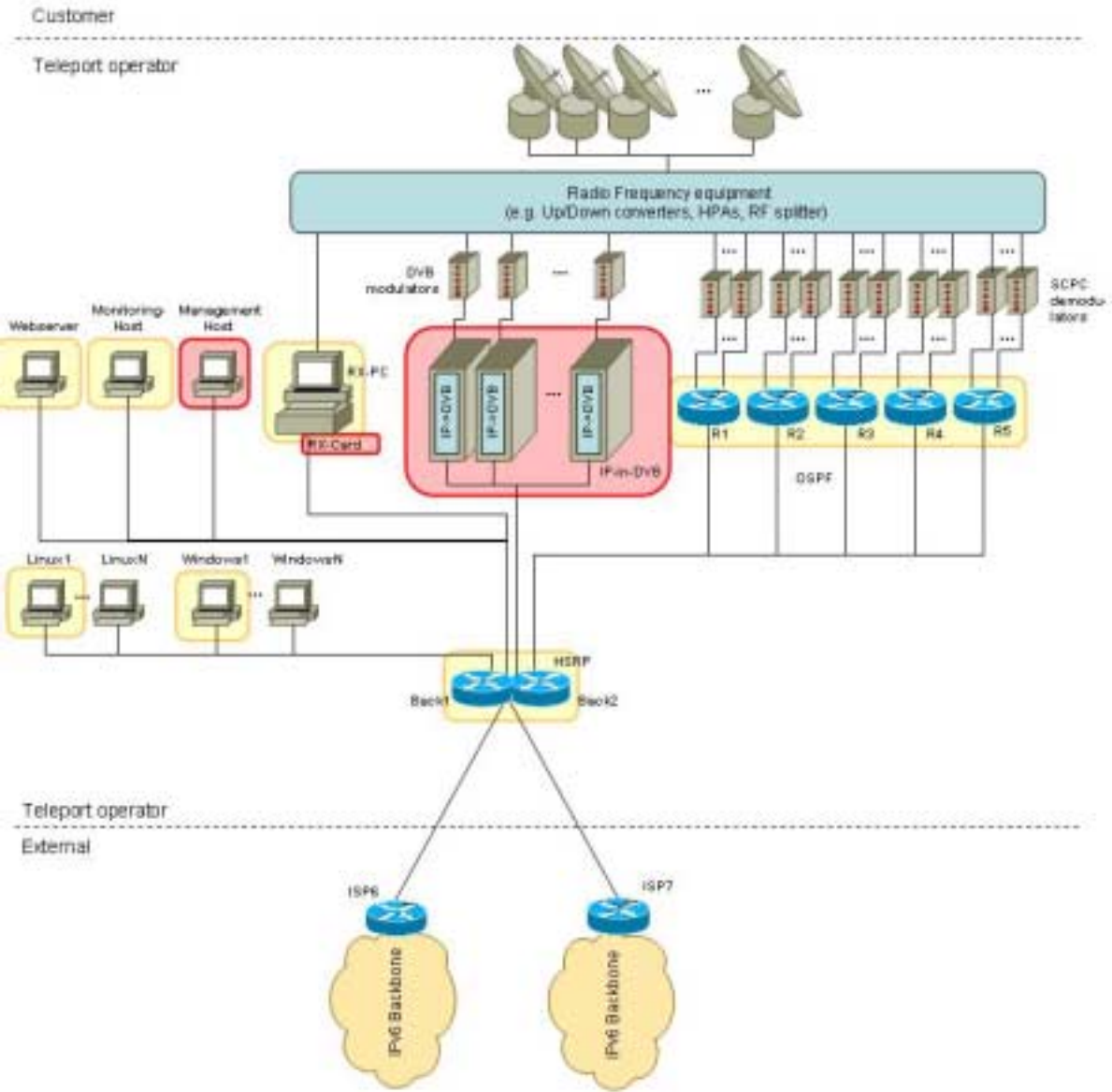

- Use ISPs with IPv6 support
- Use ULE DVB-S gateway
- Replace OS on DVB-S receiver with one with IPv6 support
- Use IPv4 and IPv6 capable DVB-S receiving card
- Upgrade router OS
- Upgrade OSs of web server, monitoring systems, … plus applications

Transition scenarios – Use of tunnelling as short-term solution

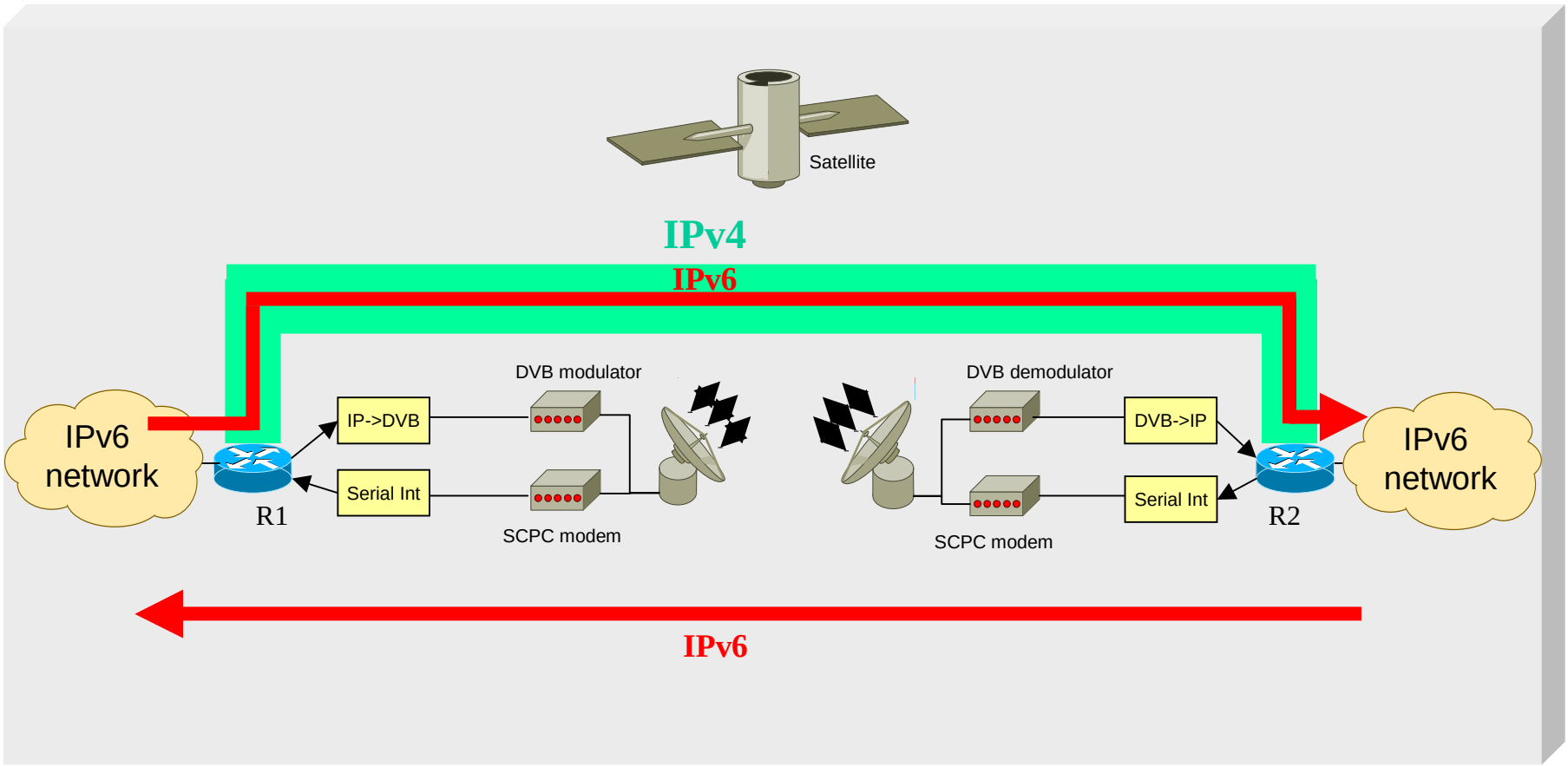

Transition scenarios – Use of tunnelling as short-term solution

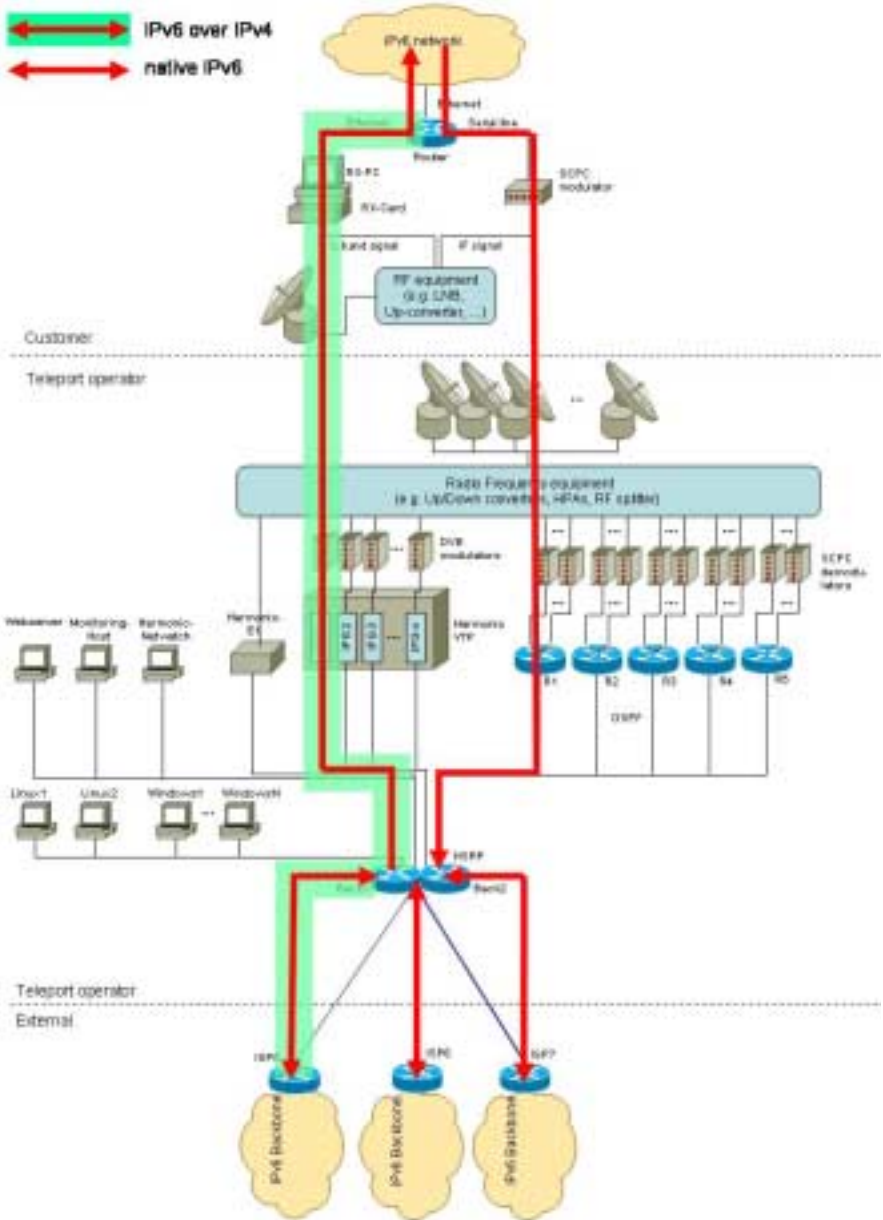

- Use ISPs with IPv6 support (native or tunnelled)
- Establish IPv6 over IPv6 tunnel on DVB-S link
- Upgrade router OS on tunnel end points

Transition scenarios – Cost factors for a Teleport

- **IPv6 training for Teleport personnel (depends on service)**
  - **Operational staff: 2 weeks**
  - **Sales people: 1 week**
  - **Hotline people: 2 days**
- **IPv6 training for customers: Depends on their experience / intended service**
- **Costs for new equipment and upgrades**
  - **DVB-S sender equipment:**
    - ODG: 6 DVB carriers per device
    - 6WIND or dpi4506: One DVB carrier per device
  - **Receiver device: PC with Pent@Value card 1500,- €**

Agenda

- Introduction
- IPv6 general aspects
- Satellite specific protocol issues
- Modified service offerings
- Transition scenarios
- Demonstrations
- Dissemination
- Lessons learnt and recommendations
- Questions and discussion

Demonstrations

Demonstration of advanced IPv6 services on IABG's Teleport

Demonstrations – overview

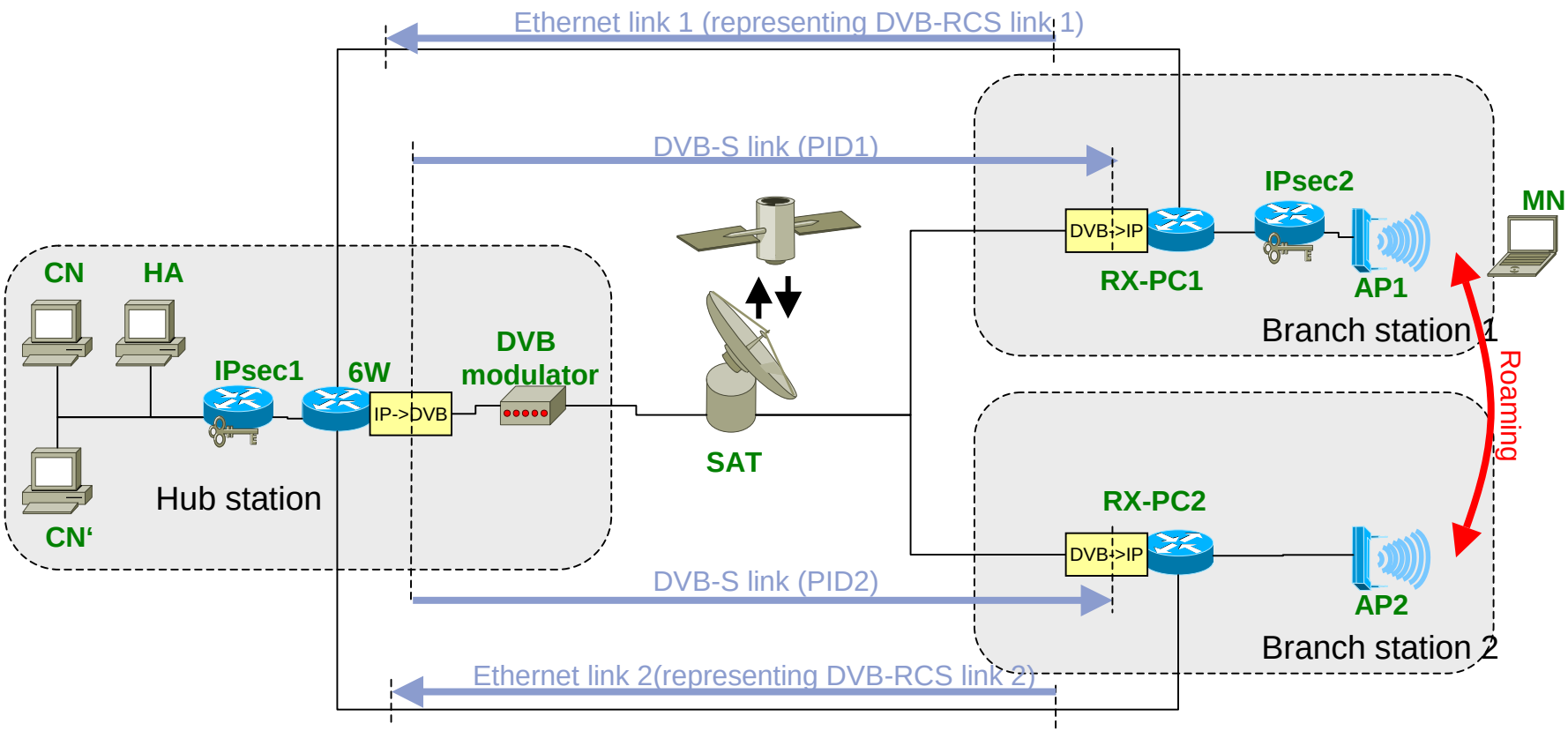

Demonstrations – Lessons learnt

- IPv6 audio (RAT) and video (VIC) conferencing worked fine via satellite
- Mobile IPv6 and IPsec worked fine via satellite (even together)
- The Mobile IPv6 handoff time has been increased by the satellite link in the middle (from around 3s to around 5s)
- RAT and VIC both worked via an IPsec secured satellite link
- VIC also has been successfully demonstrated together with Mobile IPv6 over satellite
- RAT didn‘t run on the Linux kernel version required by Mobile IPv6

Demonstrations

Demonstration with the

SILK project

Demonstrations – Overview of SILK

Prof. Peter Kirstein (UCL)

Chair of the SILK Executive Board

Demonstrations – SILK demonstration at a glance

- Intention
  - Demonstrate IPv6 over satellite functionality
  - Establish a longer trial for collection of more detailed results
  - Involve a real, large user community
  - Gain experience in a real operational environment
  - Generate awareness / educate on IPv6 over satellite
- Contributions from ESA project
  - Satellite capacity (2 Mbit/s on DVB-S, 600 kbit/s on SCPC) for a 3 months trial
  - Equipment for setting up a native IPv6 service over DVB-S (modulator, ULE encapsulator, ULE receiver cards)
  - Support during the integration phase
  - Guidance / training of the SILK community
- **Involved SILK countries: Azerbaijan, Georgia, Kazakhstan, Kyrgyzstan and Uzbekistan**

Demonstrations – Enhancing the SILK network architecture

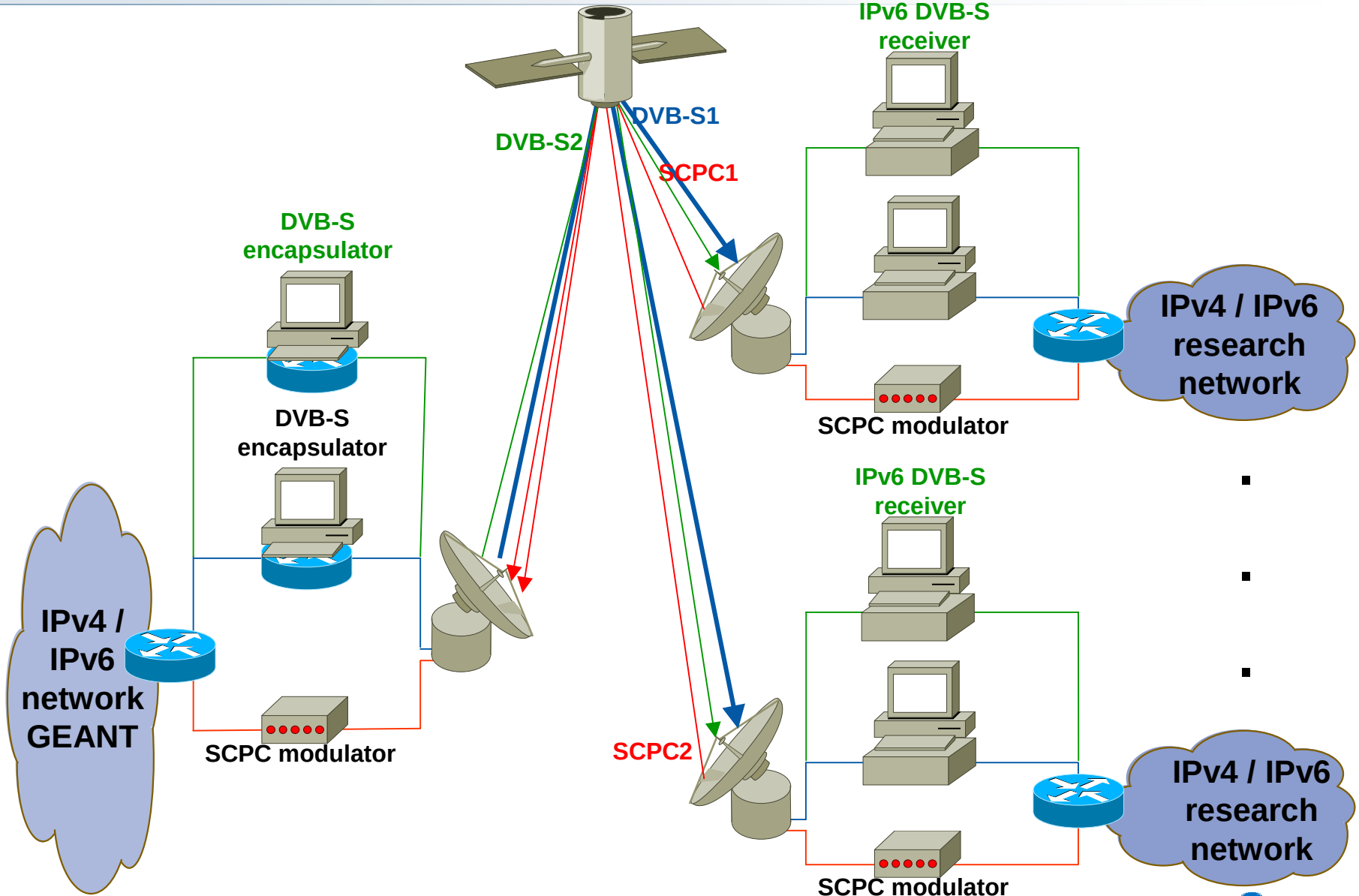

Demonstrations – IPv6 integration phases for SILK (1/2)

- Phase 1
  - Procurement / loan of required HW + SW
  - Test and configuration of ULE equipment at IABG
  - Assembly of installation guidelines (may need to be translated to Russian by SILK)
  - Shipment of components to SILK partners
  - Upgrade of SILK 7200 routers
  - Connection of DESY to GEANT
- Phase 2
  - Installation at DESY plus local tests
  - Installation of ULE at SILK sites with phone support if required
  - Installation of local test beds / systems at SILK sites
  - Final test

Demonstrations – View of the SILK hub site

Demonstrations – IPv6 integration phases for SILK (2/2)

- Phase 3
  - 3 months duration (currently ongoing)
  - Test / use / demonstration of IPv6 over satellite capability by SILK partners, e.g. use for audio / video conferencing (will be demonstrated after break)
- Phase 4
  - ½ month duration
  - Dismantling of equipment at DESY and return to ESA or continuation in some other form

Demonstrations – Monitored Round-Trip-Delay

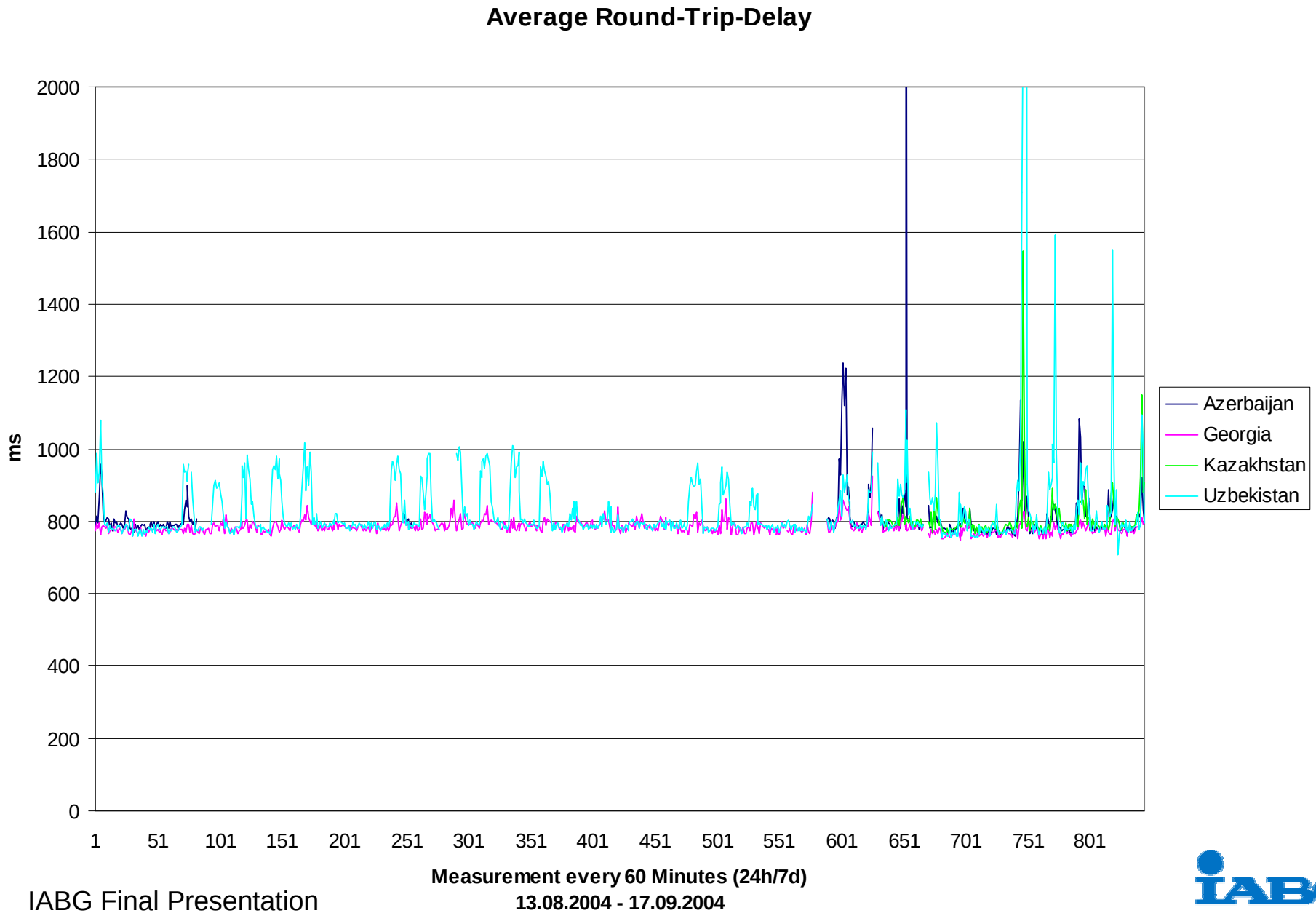

Demonstrations – Monitored Jitter

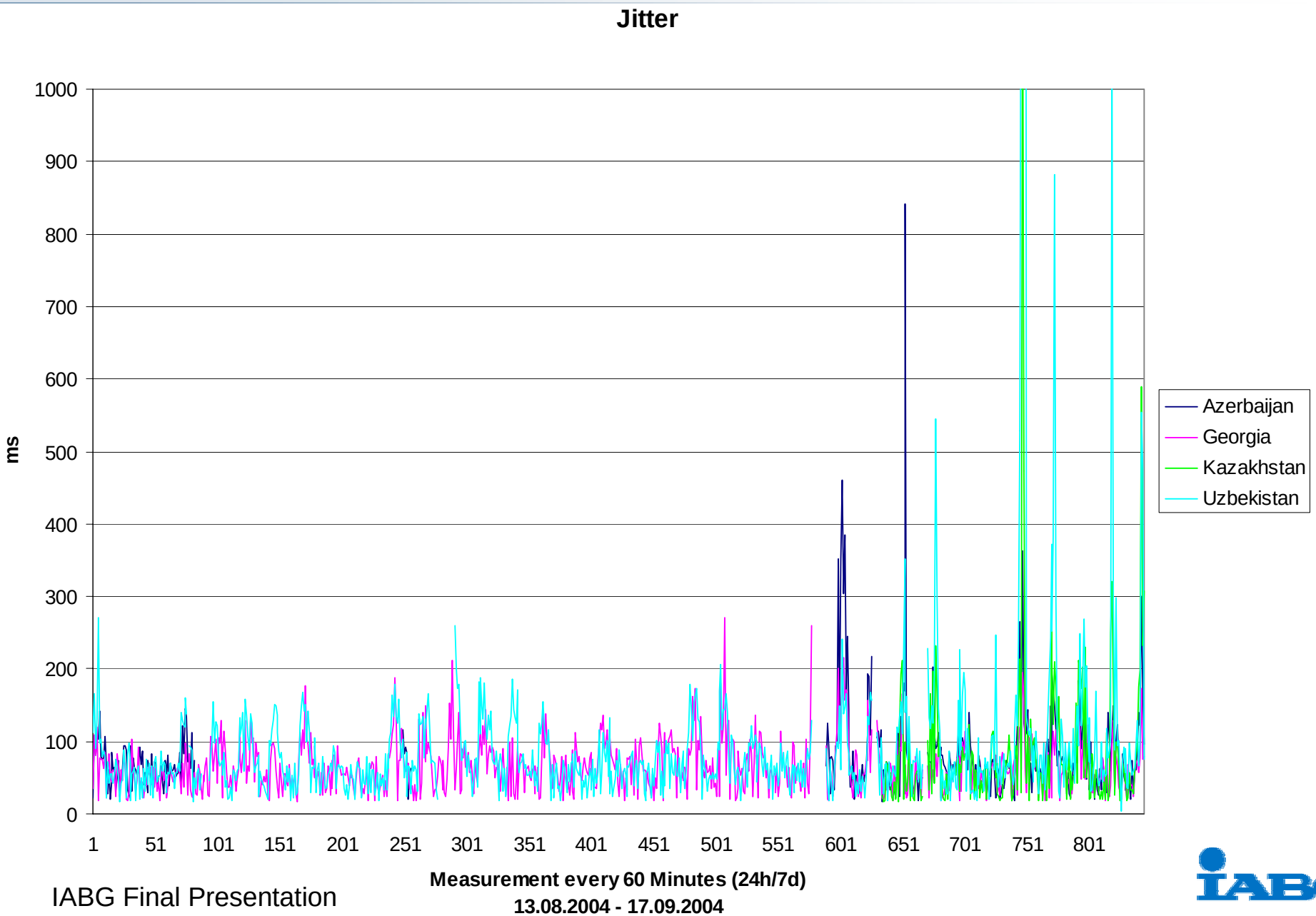

Demonstrations – Lessons learnt from this trial

- IPv6 runs quite stable in SILK
- Integration with existing IPv4 service had been possible without any problems
- Training of administrator staff and user community is absolutely required (mainly on ULE and IPv6 in general)
- Cross-trapping service between EurasiaSat-1 East and West beam is difficult to negotiate with satellite operator
- Support of 8PSK for DVB-S sender and receiver would have been appreciated
- Lack of sufficient management possibilities / separation of IPv4 and IPv6 management is a burden
- Valuable experience has been collected due to involvement of a real, large user community

Agenda

- Introduction
- IPv6 general aspects
- Satellite specific protocol issues
- Modified service offerings
- Transition scenarios
- Demonstrations
- Dissemination
- Lessons learnt and recommendations
- Questions and discussion

Dissemination – Example activities

- Fora and Task Forces
  - IPv6 Forum
  - European and national IPv6 Task Forces
  - IPv6 cluster
- Conferences
  - ESA IP networking over satellite workshop
  - 6NET IPv6 spring conference
  - German IPv6 summit
  - Asian Pacific Advanced Networking (APAN) conference
- Manufacturer
  - Mentat
  - Skystream
- Projects
  - SILK
  - INSC
- Press
  - Heise News ticker

Agenda

- Introduction
- IPv6 general aspects
- Satellite specific protocol issues
- Modified service offerings
- Transition scenarios
- Demonstrations
- Dissemination
- Lessons learnt and recommendations
- Questions and discussion

Lessons learnt

Lessons learnt

- Satellite specific protocol issues
  - MPE encapsulation lacks native IPv6 support
  - IPv6 stateless address autoconfiguration won‘t work on many satellite architectures (UDLR could help here)
  - Proprietary functionality like PEP often lacks IPv6 support
  - Mandatory IPsec support could conflict with some PEP scenarios
  - Management functionality for most satellite equipment often lacks IPv6 support
- Modified service offerings
  - Mandatory IPsec support allow for encryption of satellite link from hub to terminal (less conflicting with PEPs)
  - Larger deployment of VoIP over satellite in Asia / Middle East

Lessons learnt – continued

- Transition scenarios
  - Introduction of IPv6 should be done in a dual-stack way
  - Non IPv6 ready parts (e.g. DVB-S links) should be tunnelled
  - Finally missing IPv6 functionality should be added by manufacturer
- Demonstration
  - Setting up ODG based ULE encapsulator worked straightforward
  - Setting up Pent@Value based ULE receiver is sensitive to Linux system configuration
  - Pent@Value solution doesn‘t support 8PSK (however, ULE is now part of Linux kernel and should therefore work with more DVB-S receiving cards)
  - Once configured, ODG and Pent@Value receiver run stable
  - Advanced IPv6 functionality like security and mobility support runs smoothly over satellite (increased handoff delay)

Lessons learnt and recommendations

Recommendations

Recommendations – Product enhancement

- Add missing functionality to satellite products
  - ULE support for DVB-S sender and receiver, alternatively extension of MPE to support IPv6
  - IPv6 support for management systems
  - IPv6 support for PEPs

Recommendations – Standardisation

- IETF ipdvb WG
  - Finally standardize ULE
  - Work on more dynamic address resolution mechanisms (for IPv4 and IPv6)
- ETSI DVB
  - Clarify the distinction of IPv4 and IPv6 packets carried in MPE without using LLC/SNAP
- ETSI DVB-RCS
  - Push / investigate the combination of forward and return link into one logical interface
  - Add full IPv6 support to DVB-RCS MIB

Recommendations – Deployment

It's time to start with "IPv6 over Satellite" deployment

- Deployment in R&D projects
  - ESA „IPv6 over Satellite"
  - EC „SATIP6"
  - NATO „INSC"
- Deployment in „pre-commercial" projects
  - SILK project
  - WIDE project
- Offering of commercial services
  - Service offering on Teleports

Recommendations – Dissemination

Dissemination is important to …

- Generate Awareness
- Push for missing standardisation work
- Push for missing product functionality
- Educate users
- Bring together manufacturer, service provider and user

Agenda

- Introduction
- IPv6 general aspects
- Satellite specific protocol issues
- Modified service offerings
- Transition scenarios
- Demonstrations
- Dissemination
- Lessons learnt and recommendations
- Questions and discussion

Questions and discussion

Are there any questions?

Questions and discussion – Contact

For any further questions please contact …

Wolfgang Fritsche

Manager Advanced IP Services

Phone: +49 89 6088-2897
Email: fritsche@iabg.de